TECHNICAL CORRIGENDUM#1
TO
BIDDING DOCUMENT

Dated: 08.10.2024

BIDDING DOCUMENT NO. : 05/51/23V2/TNGCL/001-iv-02

E-TENDER NO./GEM BID NO. : NA

SUBJECT OF BIDDING DOCUMENT : SUPPLY, CONSTRUCTION, ERECTION AND COMMISSIONING OF CIVIL, STRUCTURAL, ELECTRICAL AND MECHANICAL WORKS FOR DBS, ONLINE STATION, MOTHER STATION AT WEST TRIPURA GA (2 YEARS ARC)

The terms and conditions of the Bidding Document stands modified to the extent indicated below and all other terms and conditions of the Bidding Document remains unaltered:

Sn. No.	Volume of Bidding Document	Section	Page No.	Clause No.	Clause Description	Additions / ~~Deletions / Modifications~~
1.	Vol II	-	-	-	-	Specification for above ground station piping, Data sheets, P & ID for station piping, QAP and ITP for fittings, pipes, valves, Particular job specification and other required specifications & documents have been added to give more clarity to bidders.

Note: This Corrigendum shall form an integral part of the bidding document and shall be signed/stamped and submitted along with the bid.

_____
(STAMP & SIGNATURE OF BIDDER)

C O N T E N T S

LIST OF SPECIFICATIONS / STANDARDS

I. TECHNICAL SPECIFICATION FOR MECHANICAL WORKS

1.	Specification for Piping Fabrication and Erection	MEC/S/05/21/06
2.	Specification for Shop and Field Painting	MEC/S/05/21/07
3.	Specification for Pipeline Markers	MEC/S/05/21/10
4.	Specification for Flushing and Testing of Piping Systems	MEC/S/05/21/11
5.	Specification for Gaskets, Bolts and Nuts	MEC/S/05/21/19
6.	Specification for Piping Material Specification	MEC/05/CG/M/000/1092, R-0
7.	Technical Specification for Pre-Commissioning and Commissioning	MEC/05/28/M/000/1093
8.	Specification for Health, Safety and Environment Management (HSE)	MEC/S/05/21/65
9.	Specification for Quality Assurance System Requirements	MEC/S/05/21/66
10.	Specification for Documentation for Pipeline Construction	MEC/S/05/21/69
11.	Specification for Warning Mats	MEC/TS/05/62/042, Rev-1
12.	Specification for Assorted Pipes	MEC/TS/05/62/59A, Rev-0
13.	Specification for Ball Valves	MEC/TS/05/21/002, Edn. -01, Rev- 01
14.	Specification for Plug Valves	MEC/TS/05/62/003, Rev- 02
15.	Specification for welding of onshore gas pipelines	MEC/S/05/21/02

II. QAP, DATA SHEETS AND INSPECTION TEST PLANS.

III. PARTICULAR JOB SPECIFICATION FOR STATION PIPING & PREFERRED MAKE LIST.

IV. TYP STATION PIPING P & ID

Rev. : 0
Edition : 1

SPECIFICATION
FOR
PIPING FABRICATION AND ERECTION

SPECIFICATION NO.: MEC/S/05/21/06

(OIL & GAS SBU)
MECON LIMITED
DELHI 110 092

CONTENTS

SL.NO.	DESCRIPTION
1.0	GENERAL
2.0	SCOPE
3.0	BASIS FOR WOR
4.0	FABRICATION
5.0	ERECTION
6.0	WELDING
7.0	ERECTION
8.0	INSPECTION
9.0	PROTECTIVE COATING
10.0	FLUSHING
11.0	H DROSTATIC TESTING

ANNEXURE-1 - WELDING SPECIFICATION

EXHIBIT-A - ELECTRODE UALIFICATIONS TEST RECORD
EXHIBIT-B - STRESS RELIEF HEAT TREATMENT PROCEDURE SPECIFICATION
EXHIBIT-C - STANDARD PROCEDURE SPECIFICATION NO.
EXHIBIT-D - COUPON TEST RECORD
EXHIBIT-E - WELDER s IDENTIFICATION CARD
EXHIBIT-F - RADIOGRAPHIC PROCEDURE FOR PIPE WELDING
EXHIBIT-G - WELDING SPECIFICATION CHART

ANNEXURE-2 - DESTRUCTIVE TESTING OF WELDED OINT - BUTT WELDS

ANNEXURE-3 - ULTRASONIC INSPECTION

ANNEXURE-4 - RADIOGRAPH

1.0 GENERAL

This specification covers general requirements of fabrication and erection of aboveground and trench piping systems at site. The specification covers the scope of work of contractor, basis of work to be carried out by contractor and standards, specifications and normal practice to be followed during fabrication and erection by the contractor.

2.0 SCOPE

Generally the scope of work of contractor shall include the following :

2.1 Transportation of required piping materials, pipe support and all other necessary piping materials from Owner's storage point or contractor's storage point (in case of contractor's scope of supply) to work site / shop including raising store requisitions for issue of materials in the prescribed format & maintaining an account of the materials received from Owner's stores.

2.1.1 Piping materials include the following but not limited to the same.

a. Pipes (All sizes and schedule)

b. Flanges (All sizes, types & Pressure ratings).

c. Fittings (All sizes, types and schedule)

d. Valves (All sizes, types and Ratings)

e. Gaskets (All sizes, types & Ratings)

f. Bolts, Nuts or M/C Bolts (All types)

g. Expansion joint / Bellows (All types)

h. Specialty items like online filters, ejectors, sample coolers, steam traps, strainers, air traps etc.

i. Online instruments like control valve, orifice flange, rotameter, safety valves etc.

2.2 Shop & field fabrication and erection of piping in accordance with documents listed under Cl. 3.0 i.e. BASIS OF WORK including erection of all piping materials enumerated above.

2.3 Fabrication and erection of pipe supports like shoe, saddle, guide, stops, anchors, clips, cradles, hangers, turn buckles, supporting fixtures, bracket cantilevers, struts, teeposts including erection of spring supports and sway braces.

2.4 Fabrication

2.4.1 Fabrication of piping specials like special radius bends, reducers, mitres etc.

2.4.2 Fabrication of plain and threaded nipples from pipes as required during erection.

2.4.3 Fabrication of swage nipples as and when required.

2.4.4 Fabrication of odd angle elbow like 60 , 30 or any other angle from 90/45 elbows as and when required.

2.4.5 Fabrication of flange, reducing flange, blind flange, spectacle blinds as and when required.

2.4.6 Fabrication of stub-in connection with or without reinforcement.

2.4.7 Grinding of edges of pipes, fittings, flanges etc. to match mating edges of uneven / different thickness wherever required.

2.5 Modifications like providing additional cleats, extension of stem of valve, locking arrangement of valves etc. as and when required.

2.6 Preparation of Isometrics, bill of materials, supporting details of all NON-IBR lines upto 2-1/2 within the unit battery limit and get subsequent approval from Engineer-in-Charge as and when called for.

2.7 Obtaining approval for drawings prepared by contractor from statutory authority, if required.

2.8 Spun concrete lining of the inside of pipes 3 NB & above including fittings and flanges as required in accordance with specification.

2.9 Rubber lining inside pipes, fittings, flanges as and when required, in accordance with specification.

2.10 Radiography, stress relieving, dye penetration, magnetic particle test etc. as required in specification.

2.11 Performing PMI using alloy analysers as per Standard Specification for Positive Material Identification at Construction Sites, 6-82-0002 .

2.12 Casting of concrete pedestals and fabrication & erection of small structures for pipe supports including supply of necessary materials.

2.13 Providing insert plates from concrete structures and repair of platform gratings around pipe openings.

2.14 Making material reconciliation statement and return of Owners supply left over materials to Owners storage.

2.15 Flushing and testing of all piping systems as per standard specification for inspection, flushing and testing of piping systems (Specification No. MEC/S/05/21/11).

3.0 BASIS FOR WORK

3.1 The complete piping work shall be carried out in accordance with the following

3.1.1 Approved for Construction drawings and sketches issued by MECON to the Contractor - Plans and/or Isometrics.

3.1.2 Approved for Construc tion drawings and sketches issued by Turn-key bidders to the Contractor - Plans and/or Isometrics.

3.1.3 Approved Process licensor s standards and specifications.

3.1.4 Drawings, sketches and doc uments prepared by contractor duly approve d by Engine er-in-Charge (such as isometrics and offsite piping etc.)

3.1.5 Approved construction job procedures prepared by Contractor as stipulated in 2.16

3.1.6 MECON specifications/documents as below :

a. Process and Instrument Diagram.

b. Piping Materials Specification

c. Piping support standards.

d. Line list / Number

e. Piping support index.

f. Standard specification of NDT Requirement of Piping

g. Welding specification charts for piping classes.

h. Standard specification for Pressure Testing of Erected Piping System.

i. Welding specification for fabrication of piping

j. Any other MECON or OTHER specifications attached with Piping Material Specification or special condition of contract.

k. Procedure for storage, preservation and positive identification of materials Contractors works / stores.

3.1.7 Following codes, standards and regulations

a. ASME B 31.3 : Process Piping
b. ASME Sec. VIII : Code for unfired pressure vessel.
c. IBR Regulations

d. IS:823 : Code for procedure for Manual Metal Are Welding of Mild Steel (for structural steel).

e. NACE Std. : Code for Sour Services material requirements MR.

Note : All codes referred shall be latest edition.

3.2 Deviations

Where a deviation from the Basis of Work and approved job procedure described above is required or where the basis of work does not cover a particular situation, the matter shall be brought to the notice of Engineer - in - Charg e and the work carried out only after obtaining written approval from him in each case.

4.0 FABRICATION

4.1 Piping Material

Pipe, pipe fittings, flanges, valves, gaskets, studs bolts etc. used in a given piping system shall be strictly as per the Piping Material Specification for the Pipe Class specified for that system. To ensure t he above requirement, all piping mate rial supplied by the Owner / Contractor shall have proper identification marks as per relevant standards / MECON's specifications / Licensors specification. Contractor shall provide identification marks on left over pipe lengths wherever marked up pipe lengths have been fabricated / erect ed. Material traceability is to be maintained for AS., S.S., NACE, LTCS, mate rial for Hydrogen service and other exotic materials by way of transferring heat number, etc. (hard punching) as per approved procedure. This shall be in addition to colour coding for all piping mate rials to avoid mix-up.

4.2 Fabrication

4.2.1 All fabrication shall be carried out in accordan ce with piping ge neral arrangement drawings, (prepared by CONTRACTOR and approved by COMPAN) including this specification and codes as specified in section 2.0.

4.2.2 CONTRACTOR shall be responsible for working to the exact dimensions as per the approved drawings. Dimensional tolerances to be adopted during implementation of fabrication work shall be as per attached sketch TOLERANCES FOR FABRICATION .

4.2.3 Flange bolt holes shall generally straddle the established centre lines unless other orientation is required and as called out in approved drawings.

4.2.4 Threading shall be NP T to ANSI B 1.20.1. Threading shall preferably be done after bending, forging or heat treatment operation. However if it is not possible, precaution shall be taken to protect threading against deformation. Thread shall be clean cut with no burrs or stripping. Dies shall be new, sharp and prope rly designed for piping material. Ends shall be reamed to remove burrs.

4.2.5 All threaded joints shall be aligned properly. The pipe entering unions shall be true to centrelines so as to avoid forcing of union coupling during make up. Damaged threads shall be cut from the end of run and the pipe shall be rethreaded.

4.2.6 Immediately before testing the piping, all threads of pipe and fittings shall be thoroughly cleared of cuttings, fuel oil or other foreign matter. The male threads shall be sealed with thread sealant and the piping made up sufficiently for the thread to seize. Sealant shall be teflon tape.

4.2.7 Seal welding of threaded connections when specified shall include the first block valve, cover all threads. The joint shall be cleaned of all cutting oil and other foreign material and made up dry to full thread engagement. Instrument threaded connections which are frequently subjected to testing and maintenance shall not be seal welded.

4.2.8 All threaded connections shall be protected from rusting by applying greases or oil when in operating condition.

4.2.9 When socket weld fittings or valves are used, pipe shall be spaced approximately 1/16 to avoid bottoming which could result in excessive weld stress.

4.2.10 Where the ends of the piping components being welded have an internal surface misalignment exceeding 1.6mm, the wall of the component extending internally shall be trimmed by machining so that the adjoining internal surface will approximately flush.

For the purpose of common understanding the construction job procedure, to be submitted by the contractor, shall include proposal for

- Maximizing prefabrication, inspection and testing at fabrication shop with minimum field joints.
- Positive material identification, handling, storage & preservation.

4.3 Dimensional Tolerances

Dimensional tolerances for piping fabrication shall be as per MECON Standard Specification. The Contractor shall be responsible for working to the dimensions shown on the drawings. However, the Contractor shall bear in mind that there may be variations between the dimensions shown in the drawing and those actually existing at site due to minor variations in the location of equipments, inserts, structures etc. To take care of these variations Field Welds shall be provided during piping fabrication. An extra pipe length of 100 mm over and above the dimensions indicated in the drawing may be left on one side of the pipe at each of the field welds. During erection, the pipe end with extra length at each field weld, shall be cut to obtain the actual dimension occurring at site. Isometrics, if supplied may have the field welds marked on them. However, it is the responsibility of the Contractor to provide adequate number of field welds. In any case no extra claims will be entertained from the Contractor on this account. Wherever errors / omissions occur in drawings and Bills of Materials it shall be the Contractor's responsibility to notify the Engineer-in-Charge prior to fabrication or erection.

4.4 IBR Piping

4.4.1 Contractor shall be supplied generally with all drawings for steam piping falling under the purview of Indian Boiler Regulations duly approved by Boiler Inspectorate. The Contractor shall carry out the fabrications, erection and testing of this piping as per requirements of Indian Boiler Regulations and to the entire satisfaction of the local Boiler Inspector. The Contractor shall also get the approval of IBR inspector for all fabrication and testing done by him at his own cost. All certificates of approval shall be in proper IBR forms. . .

4.4.2 Approval of boiler inspector on the drawings prepared by the contractor shall be obtained by the contractor at his own cost.

4.5 Pipe Joints

The piping class of each line specifies the type of pipe joints to be adopted. In general, joining of lines 2 and above in process and utility piping shall be accomplished by butt welds. oining of lines 1-1/2 and below shall be by socket welding / butt welding / threaded joints as specified in Piping Material Specifications . However, in piping 1-1/2 and below where socket welding/ threaded joints are specified butt - welds may be used with the approval of Engineer-in-Charge for pipe to pipe joining in long runs of piping. This is only applicable for non-galvanized piping without lining.

Flange joints shall be used at connections to Vessels, Equipments, Valves and where required for ease of erection and maintenance as indicated in drawings.

4.6 Butt Welded and Socket Welded Piping

End preparation, alignment and fit-up of pipe pieces to be welded, welding, pre-heat, post-heating and heat treatment shall be as described in the welding specification and NDT specification.

4.7 Screwed Piping

In general, Galvanized piping shall have threads as per IS:554 or ANSI B 2.1 NPT as required to match threads on fittings, valves etc. All other piping shall have threads as per ANSI B 2.1, tapered unless specified otherwise.

Threads shall be clean cut, without any burrs or stripping and the ends shall be reamed. Threading of pipes shall be done preferably after bending, forging or heat treating operations. If this is not possible, threads shall be gauge checked and chased after welding heat treatment etc.

During assembly of threaded joints, all threads of pipes and fittings shall be thoroughly cleaned of cuttings, dirt, oil or any other foreign matter. The male threads shall be coated with thread sealant and the joint tightened sufficiently for the threads to seize and give a leakproof joint.

Threaded joints to be seal-welded shall be cleaned of all foreign matter, including sealant and made up to full thread engagement before seal welding.

4.8 Flange Connections

All flange facings shall be true and perpendicular to the axis of pipe to which they are attached. Flanged bolt holes shall straddle the normal centerlines unless different orientation is shown in the drawing.

Wherever a spectacle blind is to be provided, drilling and tapping for the jack screws in the flange, shall be done before welding it to the pipe.

4.9 Branch Connections

Branch connections shall be as indicated in the piping material specifications. For end preparation, alignment, spacing, fit-up and welding of branch connections refer welding specifications. Templates shall be used wherever required to ensure accurate cutting and proper fit-up.

For all branch connections accomplished either by pipe to pipe connections or by using forged tees the rates quoted for piping shall be inclusive of this work.

Reinforcement pads shall be provided wherever indicated in drawings/ specifications etc.

4.10 Bending

Bending shall be as per ASME B31.3 except that corrugated or creased bends shall not be used.

Cold bends for lines 1-1/2 and below, with a bend radius of 5 times the nominal diameter shall be used as required in place of elbows wherever allowed by piping specifications. Bending of pipes 2 and above may be required in some cases like that for headers around heaters, reactors etc.

The completed bend shall have a smooth surface, free from cracks, buckles, wrinkles, bulges, flat spots and other serious defects. They shall be true to dimensions. The flattening of a bend, as measured by the difference between the maximum and minimum diameters at any cross-section, shall not exceed 8 and 3 of the nominal outside diameter, for internal and external pressure respectively.

4.11 Forging and forming

Forging and forming of small bore fittings, like reducing nipples for piping 1-1/2 and below, shall be as per ASME B 31.3.

4.12 Mitre Bends and Fabricated Reducers

The specific application of weld ed mitre bends and fabrication reducers shall be governed by the Piping Material Specifications. Generally all 90 deg. mitres shall be 4-piece 3-weld type and 45 deg. mitres shall be 3-piece 2-weld type as per MECON Standard unless otherwise specified. Reducers shall be fabricated as per directions of Engine er-in-Charge. The radiographic requirements sha ll be as per Material Specific ations for process and utility systems and NDT Specification fo r steam piping under IBR, radiographic requirements of IBR shall be complied with.

4.13 Cutting and Trimming of Standard Fittings & Pipes

Components like pipes, elbows, couplings, half-couplings etc. shall be cut / trimme d / e dge prepared wherever required to meet fabrication and erection requirements, as per drawings and instructions of Engine er-in-Charge. Nipples as required shall be prepared from straight length piping.

4.14 Galvanised Piping

Galvanised carbon steel piping shall be completely cold wo rked, so as not to damage galvanised surfaces. This piping involves only threaded joints and additional external threading on pipes may be required to be done as per requirement.

4.15 Jacketed Piping

The acketing shall be done in accordance with MECON Specification or Licensors specification as suggested in material specification or special condition of contract.

Pre-assembly of jacketed elements to the maximum extent possible shall be accomplished at shop by Contractor. Position of jumpover and no les on the jacket pipes, fittings etc. shall be marked according to pipe disposition and those shall be prefabricated to avoid damaging of inner pipe and obstruction of jacket space. However, valves, flow glasses, in line instruments or even fittings shall be supplied as jacketed.

4.16 Shop Fabrication / Prefabrication

The purpose of shop fabric ation or pre-fabrication is to m inimise work during erection to the extent possible. Piping spool, afte r fabrication, shall be stacked with proper identification marks, so as facilitate their with drawal at any time during erec tion. During this period all flange (gasket contact faces) and t hreads shall be adequately fabricated by coating with a removable rust pre ventive. Care shall also be taken to avoid any physical damage to flange faces and threads.

4.17 Miscellaneous

4.17.1 Contractor shall fabricate miscellaneous elements like flash p ot, seal p ot, sample cooler, supporting elements like turn buckles, extension of spindles and interlocking arrangement of valves, operating platforms as required by Engineer-in-Charge.

4.17.2 Spun Concrete Lining

The work of inside spun concrete lining of pipes and specials of diameter 3 and above shall be done as per material specifications and special condition contract.

4.17.3 Fabrication of pipes from plate

Pipes shall be fabricated at site as and when required as per the specifications attached and the actual Piping Material Specification.

5.0 ERECTION

5.1 Cleaning of Piping before Erection

Before erection all pre-fabricated spool pieces, pipes, fittings etc. shall be cleaned inside and outside by suitable means. The cleaning process shall include removal of all foreign matter such as scale, sand, weld spatter chips etc. by wire brushes, cleaning tools etc. and blowing with compressed air/or flushing out with water. Special cleaning requirements for some services, if any shall be as specified in the piping material specification or isometric or line list. S.S jacketed piping requiring pickling shall be pickled to remove oxidation and discolouring due to welding.

5.2 Piping Routing

No deviations from the piping route indicated in drawings shall be permitted without the consent of Engineer- in-Charge.

Pipe to pipe, pipe to structure / equipments distances / clearances as shown in the drawings shall be strictly followed as these clearances may be required for the free expansion of piping / equipment. No deviations from these clearances shall be permissible without the approval of Engineer-in-Charge.

In case of fouling of a line with other piping, structure, equipment etc. the matter shall be brought to the notice of Engineer-in-Charge and corrective action shall be taken as per his instructions.

5.3 Cold Pull

Wherever cold pull is specified, the Contractor shall maintain the necessary gap, as indicated in the drawing. Confirmation in writing shall be obtained by the Contractor from the Engineer-in-Charge, certifying that the gap between the pipes is as indicated in the drawing, before drawing the cold pull. Stress relieving shall be performed before removing the gadgets for cold pulling.

5.4 Slopes

Slopes specified for various lines in the drawings / P&ID shall be maintained by the Contractor. Corrective action shall be taken by th e Contractor in consultation with Engineer-in-Charge wherever the Contractor is not able to maintain the specified slope.

5.5 Expansion Joints / Bellows

Installation of Expansion oints/Bellows shall be as follows:

- All Expansion joints / Bellows shall be installed in accordance with the specification and installation drawings, supplied to the Contractor.
- Upon receipt, the Contractor shall remove the Ex pansion oints/ Bellows from the case(s) and check for any damage occurred during transit.
- The Contractor shall bring to the notice of the Engineer-in-Charge any damage done to the bellows / corrugations, hinges, tie-rods, flanges / weld ends etc.
- Each Expansion oint / Bellow shall be blown fre e of dust / fore ign matter with compressed air or cleaned with a piece of cloth.
- For handling and installation of Expansion oints, gre at care shall be taken while aligning. An E xpansion oints shall never be slinged from be llows corrugations / external shrouds, tie / rods, angles.
- An Expansion oints / Bellow shall preferably be slinged from the end pipes / flanges or on the middle pipe.
- All Expansion oints shall be delivered to the Contractor at Installation length , maintained by me ans of shipping rods, angles welded to the flanges or weld ends or by wooden or metallic stops.
- Expansion oints stop blocks shall be ca refully removed after hydrostatic testing. Angles welded to the flanges or we ld ends shall be trimmed by saw as pe r manufacturer s instructions and the flanges or weld ends shall be ground smooth.
- The pipe ends in which the Expansion oint is to be insta lled shall be perfectly aligned or shall have specified lateral deflection as noted on the relevant drawings.
- The pipe ends / flanges shall be spaced at a distance specified in the drawings.
- The Expansion oint shall be placed between the mating pipe ends / flanges and shall be tack welded/bolted. The mating pipes shall again be checked for correct alignment.
- Butt-welding shall be carried out at each end of the expansion joint. For flanged Expansion oint, the mating flanges shall be bolted.

- After the Expansion oint is installed the Contractor shall ensure that the mating pipes and Expansion oints are in correct alignm ent and that the pipes are well supported and guided.

- The Expansion oint shall not have any lateral deflection. The Contractor shall maintain parallelism of restraining rings or bellows convolutions.

- Precautions

  - For carrying out welding, earthing lead sh all not be attached with the Expansion oint.

  - The Expansion bellow shall be protected from arc weld spot and welding spatter.

  - Hydrostatic Testing of the system having Expansion oint shall be performed with shipping lugs in position. These lugs shall be removed after testing and certification is over.

5.6 Flange Connections

While fitting up mating flanges, care shall be exercised to properly align the pipes and to check the flanges for trueness, so that faces of the flanges can be pulled together, without inducing any stresses in the pipes and the equipment no les. Extra care shall be t aken for flange connections to pumps, turbines, compressors, cold boxes, air coolers etc. The flange connections to these equipments shall be checked for misalignment, excessive gap etc. after the final alig nment of the equipment is o ver. The joint shall be made up after obtaining approval of Engineer-in-Charge.

Temporary protective covers shall be retained on all flange connect ions of pumps, turbines, compressors and other similar equipments, until the piping is finally connected, so as to avoid any foreign material from entering these equipments.

The assembly of a flange joint shall be done in such a way that the gasket between these flange faces is uniformly compressed. To achieve this the bolts shall be tightened in a proper sequence. All bolts shall extend completely through their nuts but not more than 1/4 .

Steel to C.I. flange joints shall be made up with extreme care, tightening the bolts uniformly after bringing flange flush with gaskets with accurate pattern and lateral alignment.

5.7 Vents and Drains

High point vents and low point drains shall be provided as per the instructions of Engineer-in-Charge, even if these are not shown in the drawings. The details of vents and drains shall be as per piping material specifications / job standards.

5.8 Valves

Valves shall be installed with spindle / actuator orientation / position as shown in the layout drawings. In case of any difficulty in doing this or if the spindle orientation / position is not shown in the drawings, the Engineer-in-Charge shall be consulted and work done as per his instructions. Care shall be exercised to ensure that globe valves, check valves, and other uni-directional valves are installed with the Flow direction arrow on the valve body pointing in the correct direction. If the direction of the arrow is not marked on such valves, this shall be done in the presence of Engineer-in-Charge before installation.

Fabrication of stem extensions, locking arrangements and interlocking arrangements of valves (if called for), shall be carried out as per drawings / instructions of Engineer-in-Charge.

5.9 Instruments

Installation of in-line instruments such as restriction orifices, control valves, safety valves, relief valves, rotameters, orifice flange assembly, venturimeters, flowmeters etc. shall form a part of piping erection work.

Fabrication and erection of piping upto first block valve / nozzle / flange for installation of offline Instruments for measurement of level, pressure, temperature, flow etc. shall also form part of piping construction work. The limits of piping and instrumentation work will be shown in drawings / standards / specifications. Orientations / locations of take-offs for temperature, pressure, flow, level connections etc. shown in drawings shall be maintained.

Flushing and testing of piping systems which include instruments mentioned above and the precautions to be taken are covered in flushing, testing and inspection of piping. Care shall be exercised and adequate precautions taken to avoid damage and entry foreign matter into instruments during transportation, installation, testing etc.

5.10 Line Mounted Eqipments / Items

Installation of line mounted items like filters, strainers, steam traps, air traps, desuperheaters, ejectors, samples coolers, mixers, flame arrestors, sight glasses etc. including their supporting arrangements shall form part of piping erection work.

5.11 Bolts and Nuts

The Contractor shall apply moly coat grease mixed with graphite powder (unless otherwise specified in piping classes) all bolts and nuts during storage, after erection and wherever flange connections are broken and made-up for any purpose whatsoever. The grease and graphite powder shall be supplied by the Contractor within the rates for piping work.

5.12 Pipe Supports

Pipe supports are designed and located to effectively sustain the weight and thermal effects of the piping system and to prevent its vibrations. Location and design pipe supports will be shown in drawing for lines 2 NB. However, any extra supports desired by Engineer-in-Charge

shall also be installed.

No pipe shoe / cradle shall be offset unless specifically shown in the drawings.

Hanger rods shall be installed inclined in a direction opposite to the direction in which the pipe move during expansion.

Preset pins of all spring supports shall be removed only after hydrostatic testing and insulation is over. Springs shall be checked for the range of movement and adjusted if necessary to obtain the correct positioning in cold condition. These shall be subsequently adjusted to hot setting in operating condition. The following points shall be checked after installation, with the Engineer-in-Charge and necessary confirmation in writing obtained certifying that :

- All restraints have been installed correctly.
- Clearances have been maintained as per support drawings.
- Insulation does not restrict thermal expansion.
- All temporary tack welds provided during erection have been fully removed.
- All welded supports have been fully welded.

6.0 WELDING

Welding of pipelines shall be done as per applicable codes and **Annexure-1**

7.0 ERECTION

7.1 Pre-fabrication and Field Assembly

Extent of pre-fabrication shall be purely at the discretion of CONTRACTOR keeping in view the following :-

7.1.1 Field joint shall be decided by CONTRACTOR keeping in view the transportation of pre-fabricated pieces to site.

7.1.2 There can be some variations in the dimensions and level appearing in the arrangement drawings and those actually occurring at site due to minor variations in the location of equipments, structures, cut out etc. Adequate field joints shall be provided, permitting assembly and erection of pipe work without major modification.

7.2 Supporting

Location and design of pipe supports shown in approved drawings and support drawings shall be strictly followed.

7.2.1 Supports shall be installed in such a way that they do not contribute to over stressing of a line.

7.2.2 Fabrication and erection of additional supporting elements and structural fixtures which in COMPAN s view are required for proper supporting of the system, shall be carried out by CONTRACTOR at no extra cost.

7.2.3 All temporary supports, elements required for alignment, erection and assembly shall be removed after completion of work.

7.3 **Equipment hook-up**

7.3.1 Prior to hook-up, the alignment and trueness of flange faces shall be check ed to ensure that no undue stresses shall be induced in the system while hooking up.

8.0 **INSPECTION**

8.1

8.2 CONTRACTOR shall provide all facilities/ assistance to COMPAN for proper ex ecution of their inspection without any extra charge.

8.3 All piping work shall be subjected to inspection by COMPAN at any time during fabrication. CONTRACTOR shall furnish to COMPAN detailed work programme sufficiently in advance, in order to enable COMPAN to arrange for inspection.

9.0 **PROTECTIVE COATING**

9.1 All above ground piping syste m shall be applied with protective coating in accordance with specification for shop & field painting.

9.2 All under ground portion of piping system shall be coated with three layer P.E. coating. CONTRACTOR shall prepared procedure for epoxy painting of burried pipeline for approval of COMPAN . Proc edure shall include surface preparation, brand and type of coating to be adopted. Coating of pipe s shall not commence without approval of coating procedure. T otal dry film thickness to be achiev ed shall not be less than 300 microns. Compatible primer and finish co at as recommended by coating manufacturer shall only be applied. Coating integrity shall be checked by Holiday de tector over full length of coated pipe work. Coating to be supplied by CONTRACTOR shall be suitable for design temperature.

9.3 Once the coating has been accepted by COMPAN , backfiling operation can be started. In order to protect coated pipe from damage, the excavated trench shall be examined for stone, rock and any other hard subs tance detrimental to coating. All such substances shall be removed before lowering the pipe in the trench. COMPAN may ask for a 100mm padding of c lear sand under and above pipeline in rocky or otherwise hard soil are a. No additional payme nt on account of padding shall however be admissible.

10.0 **FLUSHING**

Completed piping systems shall be flushed by CONTRACTOR with fresh water, to clean the pipe of all dirt, de bris, and foreign material. CONTRACTOR shall prepare a procedure for flushing of t he system for approval of COMPAN . Flushing shall not be commenced without approval of flushing procedure.

10.1 CONTRACTOR shall perform all activities like dismantling and reinstalling of all strainers, in line instruments etc. before and after completion of flushing.

10.2 Flushing shall be consid ered as complet e only after inspection and approv al by COMPAN .

10.3 Disposal of muck and flushing media sh all be arranged by CONTRACTOR as directed by COMPAN , in such a manner that it does not spoil the adjacent installation. CONTRACTOR shall obtain COMPAN approval regarding the place and method to be adopted for disposal of debris.

10.4 Record of flushing giving following de tails shall be submitted by CON TRACTOR to COMPAN for its approval and records :

a) Date of flushing

b) Identification of line : flushed-line number

11.0 **HYDROSTATIC TESTING**

11.1 Completed piping system as approved by COMPAN shall be hydrostatically tested in the presence of COMPAN . The general requirements of hydrostatic testing shall be in accordance with codes specified in section 2.0.

11.2 CONTRACTOR shall prepare hydrostatic test procedure based on specified codes. The hydrostatic test shall commence only after approval of procedure by COMPAN .

11.3 Piping system shall be hydrostatically te sted to a pressure corresponding to 1.4 times the design pressure.

11.4 Fresh water shall be used as test media. CONTRACTOR shall locate the source of water supply and arrange for transportation of water to test site. CONTRACTOR shall arrange at his own cost the water analysis and confirm t hat water is suitable for testing. In case any c orrosion inhibitor is to adde d, the same shall be done after approval of COMPAN .

11.5 Lines repaired subsequent to h ydrostatic test shall be retested using the same procedure as originally adopted. However COMPAN may waive such retest in case of minor repairs by taking precautionary measures to ensure sound construction.

11.6 All equipment and inst ruments used fo r hydrostatic test shall be approved by COMPAN before start of tests.

11.7 Pressure gauges shall be in stalled on line to measure test pressures. In case of longer lines two or more pressure gauges shall be installed as dire cted by COMPAN . One gauge shall be installed at the discharge of the pressurising pump. Pre ssure gauge used for hydrostatic testing shall be calibrated with dead weight tester in the presence of Engineer-in-charge. Range of pre ssure gauge shall generally be 1.5 tim es the test pressure.

11.8 Orifice plates and restrict ion orifices shall not be insta lled until hydrostatic testing is completed. Temporary gaskets shall be used during testing.

11.9 First block valve of pressure instruments shall be half op en & plugge d at the time of hydrostatic testing. Temperature connections shall be blanked off during testing.

11.10 All equipments, in line instruments, relie f valves shall be disconnected from piping system by me ans of blinds during testing. Control valves shall be replaced by spool pieces during testing.

11.11 High point vents and low point drain required for testing in addition to those marked in the drawings shall be provided by CONTRACTOR at his own cost.

11.12 All welded and screwed joints shall be kept clean for detecting leaks during testing.

11.13 Test pressure shall be ma intained long enough to facilitat e complete inspection of the system. Minimum duration of test shall be 6 hours unl ess other wise specified. Pressurising equipment shall be isolated immediately after test pressure is attained.

11.14 After successful completion of hydros tatic testing, the piping syste m shall be dewatered. All lines shall be completely dried us ing compressed air. CONTRACTOR shall make his own arrangement for supply of compressed air. Drying of lines shall be considered complete on approval by COMPAN .

11.15 **Test Records**

The records in duplicate shall be prepared and submitted by CONTRACTOR as below :

a) Date of test
b) Identification of pipe tested - line number
c) Test pressure
d) Test results
e) Signature of CONTRACTOR
f) Approval signature by COMPAN .

ANNEXURE-1

WELDING SPECIFICATION

1.0 GENERAL

This specification shall be followed for the fabrication of all types of welded joints of carbon steel above ground natural gas service piping systems.

The welded pipe joints shall include the following :

a) All line pipe joints of the longitudinal and circumferential butt welded.

b) Attachments of castings, forgings, flanges.

c) Welded manifold headers and other sub-assemblies

d) Welded branch connections with or without reinforcing pads.

e) oints in welded/ fabrication piping components.

f) The attachments of smaller connect ions for v ents drain drips and ot her instrument tappings.

Any approval granted by the Engineer-in-charge or owner s inspectors shall not relieve the contractor of his responsibilities & guarantees.

1.1 Applicable Codes & Standards

All welding work, equipments for welding, heat treatment, other auxiliary functions and the welding personnel shall be as per the requirements of the latest editions of the following approved standards and procedures :-

i) Code for gas transmission and distribution piping systems. ANSI B31.8.
ii) Code for petroleum refinery piping, ANSI B31.3.

In addition, the following c odes/ specifications referred to in the relevant code of fabrication shall be followed for t he welding/ bra ing qualific ations, consumable qualifications and non destructive test procedures.

i) Standard for welding of pipelines and related facilities API-1104.
ii) Material Specifications - Weldin g rods, electrodes and filler materials - ASME Sec. - IIC.
iii) Code for non destructive examination ASME Sec-V.
iv) ualification standard for welding and bra ing proc edure and welders, bra ers, welding and bra ing operators - ASME Sec-I

In the event of any difference due to the additional requirements mentioned in this specification, over and above those obligation as per codes, this specification shall be binding.

1.2 **Base Material**

a) In general carbon steel is used in this plant. The details of material specifications are given in the welding Specification Chart.

b) The contractor shall provide the Manufacturer s test certificates for every heat of the materials supplied by him.

1.3A **Filler Materials**

a) The Contractor shall provide all the necessary weldin g electrodes, filler materials, etc. required for the execution of the work.

b) The welding electrodes/ filler wires supplied by the Contractor shall conform to the class specified in the we lding specification chart. The materials shall be of the make approved by the Engineer-in-charge.

c) The electrode shall be suitable for the welding process recommended and base metal used. Unless otherwis e specified physical properties of the welds produced by a elect rode recommended for the welding of a p articular base metal shall not be lower than the minimum valves specified for the base metal and shall correspond to the physical properties of the class o f electrode adopted. The choice of electrode shall be made after conducting the required tests on the electrodes as p er relevant standards, and shall be the sole prerogative of the Engineer-in-charge.

d) Tungsten electrodes used shall conform to ASME Sec. II C SFA 5. 12 specification. Thoriated T ungsten electrodes shall not be permitted due to possible radiation ha ard. Instead, ceriated Tungsten Electrodes (EWCe-2 or equivalent) shall be used for GTA Welding.

e) Electrode qualification test reco rds should be submitted as per the **Exhibit-A** (attached) in respect of the electrodes tested by the contractor, for obtaining the approval of the Engineer-in-charge.

f) The Contractor shall submit batch test certificate from the electrode Manufacturers giving details of physical and chemical tests carried out by them, for each batch of electrodes to be used.

g) All electrodes shall be purchased in sealed containers and st ored properly to prevent deterioration. The electrodes removed from the containers shall be kept in holding ovens at temperature recommended by the electrode Manufacture. Out-of-the oven time of electrodes before they are co nsumed shall not exceed the limits recommended by the electrodes manufacturer. The electrodes shall be handled with care to avoid any damage to flux covering.

h) All low hydrogen type of electrodes shall be rebaked at 350 °C for 1 hour minimum and stored in ovens kept at 80-100°C before use. Recommendations of the electrode Manufacturer shall be followed if available.

i) The electrodes, filler wires and flux used shall be free from rust, oil, greases, earth and other foreign matter which can affect the quality of welding.

1.3B **SHIELDING & PURGING GAS**

a) Argon gas used in GTA welding for shielding purposes shall be 99.995 pure. The purity of the gas shall be certified by the manufacturer. The rate of flow for shielding purposes shall be established through procedure qualification tests. Normally this rate may be 12-20 CFH.

b) Argon gas with a purity level of 99.995 shall be used for purging.

c) When GTAW process alone or a combination of GTA Wand SMAW processes is recommended for the production of a particular joint, the purging shall be maintained during the root pass and for the first filling pass to minimize oxidation on the inner side of the pipe, unless otherwise specified in Welding Specification Chart.

d) Initial purging shall be maintained for sufficient period of time so that at least 4-5 times the volume between the dams is displaced, in order to completely remove the entrapped air. In no case should the initial purging period be less than 10 minutes. High gas pressure should be avoided.

e) After initial purging, the flow of the backing gas should be reduced to a point where only a slight positive pressure prevails. For systems, which have a small volume (up to 1/2 cubic foot) to be purged, a gas flow rate of 6-CFH is usually adequate. Systems of larger volume may require higher flow rates and these should be established during procedure qualification tests.

f) Gas backing (purging) is not required for socket type of welded joints.

g) Dams, used for conserving inert gas during purging, shall be removed after completion of the welding, and shall be accounted for. Wherever, removal of dams is not possible after welding, use of water-soluble dams should be made.

1.4 **Welding Consumables**

The Contractor shall provide at this own expense all the welding consumables necessary for the execution of the job such as electrodes filler wires, oxygen, acetylene, etc. and these should bear the approval of the COMPANY.

1.5 **Equipment & Accessories**

1.5.1 The Contractor should have the arrangement of sufficient number of welding and cutting equipments, auxiliaries and accessories of sufficient capacities so as to meet the target schedule.

1.5.2 All the equipment for performing the heat treatment, including transformers, thermocouples, flow meters, automatic temperature recorders with suitable calibration arrangement etc. shall be provided by the Contractor, at his own expense and these should bear the approval of the COMPAN .

1.5.3 Contractor shall make necessary arrangements at his own expense for providing the radiographic equipment, radiographic films, and all the equipment/ materials required for carrying out the dye penetrant/ magnetic particle test for satisfactory and timely completion of the job.

1.5.4 Redoing of any work necessitated by faulty equipments or operation used by the Contractor, will be done at his own expense.

1.6 **Welding Processes**

1.6.1 Welding of various materials under this specification shall be carried out using Shielded Metal Arc Welding (SMAW) Process with the approval of the Engineer-in-charge.

1.6.2 The welding processes to be employed are given in the welding specification chart. Any deviation desired by the Contractor shall be obtained through the express consent of the Engineer-in-charge.

1.6.3 Automatic and semi-automatic welding processes shall be employed only with the express approval of the Engineer-in-charge. The welding procedure adopted and consumables used shall be specifically approved.

1.6.4 A combination of different welding processes or a could be employed for a particular joint only after duly qualifying the welding procedure as per the requirements of code of fabrication to be adopted and obtaining the approval of the Engineer-in-charge.

1.7 **End Preparation**

1.7.1 **End Preparation**

The edges to be welded shall be prepared to meet the joint design requirements by gas cutting, machining or grinding method. After gas cutting, oxides shall be removed by chipping or grinding.

1.7.2 **Cleaning**

a) The ends to be welded shall be properly cleaned to remove paint, oil, greases, rust, oxides, sand, earth and other foreign matter. The ends shall be

completely dry before the welding commences.

b) On completion of each run, craters, welding irregularities, slag etc., shall be removed by grinding and chiseling. Wire brushes used for cleaning stainless steel joints shall have stainless steel wires and the grinding wheels used for grinding stainless steel shall be of a suitable type. Separate grinding wheels and wire brushes should be used for carbon steels and stainless steels.

1.8 **Alignment and Spacing**

a) Prior to alignment, the contractor shall inspect the pipe ends inside and outside for damage, dents, laminations etc. Pipe for welding shall be set up correctly spaced. Temporary attachment of any kind shall not be welded. Every effort shall be made to reduce misalignment by the use of clamp and rotation of pipes to the best fit. For pipes of same nominal wall thickness, the offset should not exceed 1.6mm. Any branch connections sleeve shall be at least 150mm from any other weld. The welds for fitting shall be so located that top of the weld shall not come within 50mm of any other weld. The use of internal line up clamps is mandatory for diameters 10 and above. However, in case where it is impossible to use internal line up clamp, external line up clamp may be used.

b) Tack welds, for maintaining the alignment, of pipe joints shall be made only by qualified welders using approved WPS. Since the tack welds become part of the final weldment they shall be executed carefully and shall be free from defects. Defective tack welds must be removed prior to the actual welding of the joints.

1.9 **Weather Conditions**

1.9.1 The parts being welded and the welding personnel should be protected from rain and strong winds. In the absence of such a protection no welding shall be carried out.

1.9.2 During field welding using GTAW process, particular care shall be exercised to prevent any air current affecting the welding process.

1.10 **Welding**

1.10.1 **Root Pass**

a) Root pass shall be made with electrodes/ filler wires recommended in the welding specification chart. The preferable size of the electrode is 2.5mm diameter (12 SWG) but in no case greater than 3.25mm (10 SWG).

b) Uphill welding shall be adopted for welding pipes weld fixed with its axis horizontal. Downward technique of welding shall not be used for welding of pipes in horizontal position, unless specifically permitted by Engineer-in-charge for a particular case.

c) The root pass of but joints should be executed properly so as to achieve full penetration with complete fusion of the root edges. Weld projection inside the pipe shall not exceed .4mm wherever not specified by the applicable code.

d) Any deviations desired from the recommended welding technique and electrodes indicated in the welding specification chart should be adopted only after obtaining express approval of the Engineer-in-charge.

e) Welding shall be continuous & uninterrupted during a pass.

f) On completion of each run, craters, welding irregularities, slag etc., shall be removed by grinding and chiselling.

g) While the welding is in progress care should be taken to avoid any kind of movement of components, to prevent occurrence of weld cracks.

h) Fillet welds shall be made by shielded metal arc/ GTAW welding process irrespective of the thickness and class of piping.

i) Peening shall not be used unless specified in the welding specification chart.

1.10.2 **Joint Completion**

a) oint shall be comp leted using the class of filler wires/ electrodes, recommended in the welding specification chart. Si e of the electrode shall not exceed 4 mm in diameter for stainless steels and alloy steels used for low temperature applications.

b) Two weld beads shall not be started at the same point in different layers.

b) Butt joints shall be completed with a cover layer that would effect good cover at the joint edge and a gradual notch free surface.

d) Each weld joints should have a workman like finish.

e) Weld identification mark shall be stamped clearly at each joint, just adjacent to the weld. Metal stamping shall not be used on the thin wall pipe. Suitable paint shall be used on thin wall pipes for identification.

f) No painting shall be done until the weld joint has been hydrostatically tested.

1.10.3 **Dissimilar Welds**

Where welds are to be produced between carbon steels and alloy steels, preheat and post weld heat treatment requirements shall be those specified for corresponding alloy steels and filler wire / electrodes sha ll correspond to E R 70 S-G or AWS E-7016/7018 type. For welds between two dissimilar Cr-Mo low alloy steels, preheat and post weld

heat treatments shall be those specified for higher alloy steel and electrodes used shall correspond to those specified for steel of lower alloy content. For carbon steel or alloy steel to stainless welds, use of filler wire / electrodes E/ER-309/E-310/E NiCr Fe-3 shall be made. The welding procedure, electrodes / filler wires to be used shall be approved by the Engineer-in-Charge.

1.11 Heat Treatment

1.11.1 Preheating

a) Preheating requirements for the various materials shall be as per the welding specification chart attached. No welding shall be carried out without preheating the joint to 10 C (50 F) when the ambient temperature is below 10 degree.

b) Preheating shall be performed using resistance or induction heating methods. Preheating by gas burners, utilising any acetylene or oxy-propane gas mixtures, with neutral flame may also be carried out when permitted by the Engineer-in-charge.

c) Preheating shall extend uniformly to atleast three times the thickness of the joint, but not less than 50mm, on both sides of the weld.

d) Preheating temperature shall be maintained over the whole length of the joint during welding. Temperature indicating crayons or other temperature indicating devices shall be provided by the contractor to check the temperature.

e) Preheating temperature shall be maintained over the whole length of the joint during welding. Temperature recorders shall be provided by the Contractor to record the temperature.

1.11.2 Post Heating

In case of alloy steel materials such as Cr-Mo steels, if the post weld heat treatment is not performed immediately after welding, the weld joint and adjacent portion of pipe, at least 50 mm on either side of weld, shall be uniformly heated to 300 c. This temperature shall be maintained for half an hour minimum, and then wrapped with mineral wool before allowing it to cool to room temperature. If the Post Heating temperature specified in the Welding Specification Charts exceeds 300 C, the same shall be followed. Similarly, if the welding specification chart specifies post-heat time, the same shall be applicable. Post weld heat treatment as specified in the Welding Specification Chart shall be carried out later on.

1.11.3 Postweld Heat Treatment

a) Post weld heat treatment, wherever required for joints between pipes, pipes an fittings, pipe body and supports shall be carried out as per the relevant specifications, applicable standards and the instructions of the Engineer-in-charge. In this regard procedure qualification to be done before carrying out

PWHT in production welds.

b) The heat treatment of welded joints shall be carried out as per the requirements laid down in ANSI B31.8 and welding specification chart.

c) The contractor shall submit for the approval of the Engineer-in-charge, the details of the post weld heat treatment procedure, as per **Exhibit `B'** attached, that the propose to adopt for each of the materials/ assembly/ part involved, well before carrying out actual heat treatment.

d) Post weld heat treatment shall be done by using an electric resistance or induction heating equipment as decided by the Engineer-in-charge.

e) While carrying out local post weld he at treatment, technique of application of heat must ensure uniform temperature attainment at all points of the portion being heat treated. Care shall be taken to ensure that width of treated band over which specified post weld heat treatment is carried out, the temperature attained is atleast as that specified in the relevant applicable standards/ codes.

f) Throughout the cycle of heat treatment, the portion outside the heated band shall be suitably wrapped under insu lation so as t o avoid any harmful temperature gradient at the exposed surface of pipe . For this purpose temperature at the exposed surface of the pipes should not be allowed to exceed 400°C.

g) The temperature attained by the portion under heat treatment shall be recorded by means of thermocouple pyrometers. Adequate number of thermocouples should be attached to the pipe directly at the equally spaced location along the periphery of the pipe joint. The minimum number of thermocouples attached per joint shall be 1 upto 6 dia, 2 upto 10 dia and 3 upto 12 and above. However the Engineer-in-charge can increase the required minimum number of thermocouples to be attached if found necessary.

h) Automatic temperature recorders which have been duly calibrated should be employed. The calibration chart of each recorder should be submitted to the Engineer-in-charge prior to starting the heat treatment operation and his approval should be obtained.

i) Immediately on completion of the heat treatment, the post w eld heat treatment charts/ records alongwith the hardness test results on the weld joints (whenever required as per the welding specification ch art), shall be submitted to Engineer-in-charge for his approval.

j) Each joint shall bear an identification number which shall be maintained in the piping sketch to be prepared by the contractor. The joint identification number should appear on the corresponding post w eld heat treatment charts. The same identification numbers shall also be followed for ident ification for corresponding radiographic films. The chart containing the identification

numbers and piping sketch shall be submitted to the Engineer-in-charge in suitable folders.

k) The hardness of the heat affected zone as well as of the weld metal, after heat treatment, shall be measured using suitable hardness tester and shall not exceed the maximum hardness specified in the welding specification chart. The weld joint shall be subjected to re-heat treatment when hardness measured exceeds the specified limit, at the contractor's own expenses.

l) The contractor shall arrange for the hardness testing and shall maintain the records of all joints tested. These records shall be checked by the plant Owner's inspector.

1.12 Cleaning of the Weld Joints

All weld joints shall be free from adherent weld spatter, slag, dirt or foreign matter. This can be achieved by brushing.

1.13 Inspection & Testing

1.13.1 General

a) The owner's inspector shall have free access to all concerned areas, where the actual work is being performed. The contractor shall also offer the Owner's inspector all means and facilities necessary for carrying out inspection.

b) The owner is entitled to depute his own inspector to the shop or field where pre-fabrication and erection of pipelines are being done with (but not limited to) the following objectives :-

i. To check the conformance to relevant standards and suitability of various welding equipments and the welding performance.
ii. To supervise the welding procedure qualification.
iii. To supervise the welder performance qualifications.

c) Contractor shall intimate sufficiently in advance the commencement of qualification tests welding works and acceptance tests, to enable the plant owner's inspector to be present to supervise them.

1.13.2 Welding Procedure Qualifications

a) Welding Procedure qualification shall be carried out in accordance with the relevant requirements of API 1104/ ASME Sec-IX or other applicable codes and other job requirements by the contractor at his expense. The contractor shall submit the welding procedure specifications in format as per **Exhibit-C** (attached) immediately after the receipt of the order.

b) COMPAN s inspector will review, check and approve the welding procedure submitted and shall release the procedure for procedure qualification tests. The procedure qualification test shall be carried out by the Contractor under field conditions at this own expense. A complete set of test result s in format as per **Exhibit-D** (attached) shall be submitted to th e COMPAN s inspector for approval immediately after completing the procedure qualification test and atleast 2 week s before the commencement of actual work. Standard tests as specified in the code shall be carried out in all cases. In addition to these tests, other tests like radiography, macro/ mi cro examination, hardness testers, dye penetrant examination, Charpy V-notch etc. shall be carried out on specimens. It shall be the responsibility of the contra ctor to carry out a ll the tests required to the satisfaction of the COMPAN s Inspector. The destructive testing of welded joints shall be as per **Annexure-2** and ASME Sec-IX.

1.13.3 **Welder's Qualification**

a) Welders shall be qualified in accordance with the API 1104/ ASME IX and other applicable codes by the contractor at his expense. The butt weld test pieces of the qualification test shall meet the radiographic tests requirements as mentioned in this specification. The COMPAN s inspector shall witness the test and certify the qualification of each we lder separately. Only those welders who have been approved by the COMPAN s inspector shall b e employed for welding. Contractor shall su bmit the welder qualificat ion test reports in the standard format and obt ain express approval, before commencement of the work. No welder shall be permitted to w ork without the possession of the identify card. It shall be the respon sibility of contractor to carry out ualification tests of welders.

b) The welders shall always have in th eir possession the identification card as shown in **Exhibit-E** and shall produc e it on de mand by the COMPAN s Inspector. It shall be the responsibility, of the Contra ctor to issue the identify cards after it has been duly certified by the COMPAN . If a welder is found to perform a type of welding for which he is not qualified, he shall be debarred from doing any further work. All welds performed by an unqualifie d welder shall be cut and redone by a qualified welder at the expense of the Contractor.

1.13.4 **Visual Inspection**

Inspection of all welds sha ll be carried out by COMPAN as per the latest editions of the applicable codes and specifications. All finished welds shall be visually inspected for parallel and axial alignment of the work, ex cessive reinforcement, concavity of welds, shrinkage, cracks, under cuts, dimensions of the weld, surface porosity and othe r surface defects. Under-cutting adjacent to th e completed weld shall not exceed the limits specified in the applicable standard/ code.

1.13.5 **Non-destructive Examination**

The non destructive examination shall mainly consist of ex amination using x -ray radiography as detailed in **Annexure-4.**

Radiographic examination of one hundred percent (100) girth welds will be required by the COMPAN . Welds shall meet the standards of accept ability as set forth in API 1104 and as per the requirements laid in subsequent paragraphs.

The CONTRACTOR shall make all the arrangements for the radiographic examination of work covered by this specification at his expense.

The COMPAN will review all the radiog raphs of welds and inform the CONTRACTOR regarding unacceptable welds. The decision of the COMPAN shall be final and binding in this regard.

All requirements mentioned in the specification shall be arranged and executed by the CONTRACTOR through his own resources. In addition, for pipe s with wall thic kness 9.5mm and abov e, ultrasonic inspection is required in the following cases as per **Annexure-3** of this specification.

a) On the first 100 welded joints corresponding to each automatic (GTAW/ GMAW) welding procedure used.

b) When 20mm or more are cut from the pipe end as supplied, the ends shall be ultrasonically inspected for an addit ional length of 20mm to e nsure no lamination exist.

c) When welds are repaired.

d) When in the opinion of COMPAN , ultrasonic inspection is required to confirm or clarify defects indicated by radiography.

e) When automatic procedure is used at least 10cm o n each weld shall be ultrasonically inspected at COMPAN s discretion.

In addition, ultrasonic inspection may be required for certain crit ical weldings of the pipeline (i.e. tie-ins, welding of valve s, flanges) randomly sele cted at COMPAN s discretion. All fillet and groove welds other than that ra diographed shall be subjected to dye pentrant/ MP inspection. The non destructive test system used for inspecting welds must be approved by the COMPAN .

Weld quality is judged on the basis of the acceptability criteria mentioned below :

Any weld which as a result of radiographic and / or ul trasonic examination in the opinion of COMPAN **exhibits** imperfections greater than the limits stated in API-1104 latest edition or as superseded in this arti cle shall be considered defective and shall so be marked with an identification paint marker.

In addition to the API-1104 requirements, the welds containing cracks including crater cracks regardless of size of location are unacceptable.

i. Any amount of inadequate penetration of the root bead as defined by API-1104 is unacceptable.

ii. Any amount of incomplete fusion between the root and bevel as defined by API-1104 is unacceptable.

iii. Unrepaired burn through areas are unacceptable.

Contractor shall appoint agency for carrying out the radiography works at site from the list of agency (ies) enclosed in the bid document.

- The Radiographic Examination procedures to be adopted shall be submitted by the contractor as per **Exhibit-F** and shall be got approved from the Owners Inspector prior to employment. A person qualified to ASNT Level-II or ASNT Level-III in Radiographic testing shall prepare the procedure. The Radiography Procedure shall be established to demonstrate that the required sensitivity can be consistently achieved under the most unfavorable parameters (e.g. source to film distance, geometric unsharpness, thickness etc.). The radiographic technique and procedure adopted shall conform of the requirements mentioned in Article 2 as well as Article 22 of ASME Sec.V. The IQI sensitivity obtained shall be equal to or better than the requirements mentioned in Article 2 of ASME Sec.V. Source side penetrameter shall be used in establishing radiographic procedure / technique. The acceptance criteria shall be as per the relevant codes of Fabrication and overriding requirements if mentioned elsewhere in the technical specifications of the contract. The Contractor shall be responsible for carrying out Radiography rectification of defects and re-radiography of welds repaired/rectified at his cost.

- The extent of Radiography shall be as per specifications to be supplied to the Contractor. For welds between dissimilar materials, the extent of Radiographic Examination shall be the more stringent of the two recommended for the materials being welded. Wherever random Radiography is called for, in a particular piping class, the dissimilar materials weld joints shall essentially be included.

- Type of Radiation source and film to be used shall be as per **Exhibit-H** for carrying out radiographic examination. However if specifications (as given elsewhere in the contract) for some critical material require usage of X-Radiation, then Radiography shall be done using X-Rays only.

- The Contractor shall fulfill all the statutory and owners safety requirements while handling X-ray and Gamma-ray equipments.

- In case of random radiography, the joints for Radiography shall be selected by the Owner s Inspector and the Radiography shall be performed in his presence, if he inst ructs the contractor to do so. The contractor shall furnish all the radiographs, to the Owner s Inspector immediately after processing along with evaluation by a person qualified to ASNT Level-II in Radiographic testing, inline with Article 2 o f ASME Sec.V. The certificate of ASNT / ISNT Level II qualification of the NDT personnel shall be submitted to owner s inspector for his approval prior to start of job.

- The Contractor shall provide the Owner s Inspector, all th e necessary facilities at site such as a dark room with co ntrolled temperature, illuminator (viewer) suitable for varying densit ies, a duly calibrated elec tronic densitometer with batteries, magnifying glass, tracing papers, ruler, marking pencils etc. to enable him to review the radiographs.

- Where random radiography is spe cified, the first weld of each welder shall be completely radiographed. In the case of pipe of si e 6 and below, the first two welds shall be completely radiographed.

- For each weld performed by a we lder found unacceptable, two additional checks shall be carried out on welds performed by the same welder. This operation is it erative and the of two additional welds for each weld deemed unsatisfactory shall be cont inued till such time that two consecutive welds of satisfactory quality are found for every defective weld.

- The Contractor shall carry out these additional radiographic testing at his own expense. To avoid the possibility of t oo many defective we lds by a single welder remaining undetected for a long period to tim e, the Contractor shall promptly arrange for Radiographic Examination so that there is no accumulation of defective joints.

- Contractor shall quote rates for X-ray as well as Gamma Ray for joints indicated to be radiographed by X-ray in Table of **Exhibit-H.**

1.13.6 **Check shots**

(a) Owner / Engineer- in- charge or his representative shall select 5 of the total joints radiographed on a day for c heck shots. Contractor shall carry out check shots as directed.

(b) Weld profiles of check sh ots shall be compared with weld profile observed in the earlier Radiographs. In the event of anyone variation in t he check shots and earlier Radiographs, contractor shall re-shoot the entire lot of joints radiographed by particular Radiography agency on the particular date. All the re-shot films shall be compared with the originally submitted films.

1.13.7 **Magnetic Particle & Liquid Penetrant Examination**

a) Whenever such tests are specified, the tests shall be carried out on joints chosen by the Owner's inspector, as per ASME Section V article 6 and 7 respectively. The tests are to be performed by a person possessing a valid ASNT / ISNT Level-II qualification in the method being used.

(b) For austenitic stainless steels and other nonmagnetic materials, liquid (dye) penetrant test shall be carried out. For carrying out this test, the materials shall be brought within a temperature limit of 15 to 50 C.

1.13.8 **Hardness Test**

Hardness requirements for welds shall be as per the Welding Specification Chart / Non Destructive Examination Specification attached elsewhere in the contract. Hardness testing shall be carried out by Vickers Hardness Tester during welding procedure qualification and shall be cross sectional. For production welds, hardness testing shall be carried out by portable digital hardness testers. Poldi hardness tester shall not be permitted. Contractor shall produce documentary evidence/calibration certificate to the Owner's Inspector and obtain approval of the hardness testing equipment.

1.13.9 **Proof Tests**

Hydrostatic and pneumatic tests shall be performed as per the requirements laid down in the respective flushing & testing specification/ applicable codes to demonstrate the soundness of the welds. The tests shall be conducted only after fulfilling the requirements of visual examination, radiography etc. and after the entire work has been certified by the Owner's inspector, as fit for subjecting to such test.

1.14 **Repairs of Welds**

a) Defects ascertained, through the inspection methods, which are beyond acceptable limits shall be removed from the joint completely by the process of chipping and grinding.

b) When an entire joint is judged unacceptable, the welding shall be completely cut and the edges be suitably prepared as per required alignment tolerances. The welded joint shall again be examined following standard practices.

c) No repair shall be carried out without prior permission of the Owner's inspector.

d) Where random radiography is specified, the test welds of each welder shall be completely radiographed. In the case of pipes of sizes 6 and below, the first two welds shall be completely radiographed.

e) For each weld found unacceptable due to a welder's fault, two additional checks should be carried out on welds performed by the same welder. This operation is interactive and the procedure of radiographing two additional

welds for each weld deemed unsatisfactory shall be continued till such time that the two consecutive welds of satisfactory quality are found for every defective weld.

The contractor shall carry out these additional radiographic testing.

To avoid the possibility of too many defective welds by a single welder remaining undetected for a long period of time, the Contractor shall promptly arrange for radiographic ex amination so that there is n o accumulation of defective joints.

1.15 Limitations on Repairs

Only one attempt at repair of any region is pe rmitted. Repairs are limited to a maximum 30 of the weld length. For internal or external repairs which open the weld root, only 20 of the weld length may be repaired. Repairs opening the root must only be carried out in the presence of COMPAN . The minimum length of a repaired area shall be 100mm as measured over the recapped length. Welds containing cracks shall be cut out and rebevelled to make a joint, COMPAN shall authorise all repairs.

1.16 Weld Rejected by Accumulation of Defects

Where a weld is rejected by the accumula tion of defect clause, as defined by API-1104 and this specification, repa irs within these limitations are permitted. Defects in the filling and capping passes shall be repaired preferentially.

1.17 DOCUMENTS TO BE SUBMITTED BY CONTRACTOR (4 COPIES EACH)

a) Electrode and Welding Consumable ualification Records as per **Exhibit-A, f**or the Welding Consumables tested and approved for the work.
b) Batch Test Certificates, for the Electrodes used, obtained from the Electrode Manufacturers.
c) Proposed Heat Treatment Procedure as per **Exhibit-B.**
d) Heat Treatment Charts.
e) Weld joint hardness test results.
f) Welding Procedure Specifications as per **Exhibit-C** immediately after receipt of the order.
g) Welding Procedure ualification records as per **Exhibit-D.**
h) Welder Performance ualification records as per **Exhibit-E** immediately after conducting Welder ualification Tests.
i) Radiography Procedure as per **Exhibit-F** and other NDT procedures.
j) Radiographic test Report along with Radiographs and other NDT reports.
k) Piping Sketch (Isometric) giving all the details regarding the pipe specifications, welded joints, joints radiographed magnetic particle, tested, ultrasonic tested, penetrant tested, joints heat treated, WPS used, welders identification number, etc.

EXHIBIT-A

Sheet 1 of 4

ELECTRODE QUALIFICATIONS TEST RECORD

A : Tested at (Site Name) Date :

Test Period :

Manufacturer s Name :

Brand Name :

Batch Number & si e Tested :

Classification & Code :

Intended for Welding in positions :

In combination with (if any) :

Code of Reference (used for testing) :

Special requirements (if any) :

B : **All - Weld Tensile Test**

Base Material used :

Pre-heat temperature :

Postweld Heat Treatment Details :

Visual Examination :

Radiographic Examination Results :

Tensile Test Results :

Sl. No.	Identification Number	U.T.S.	ield Point	Elongation	Remarks

C : **Impact Test Results**

Test Temperature : Notch in :

Type of Specimens (Impd, Charpy : Si e of Specimens :

Specimen No.	Impact Value	Average
1.		
2.		
3.		
4.		
5.		

D : **Chemical Analysis Result**

Electrode si e used :

Batch No.

C	S	P	Si	Mn	Cr	Ni	Mo

E : **Fillet Weld Test Results**

Welding Positions :

Base Materials :

Si e of electrode used :

Visual Inspection Results : 1)
2)
3)

Micro Test Results

Fracture Test Results :

Remarks :

F : **Other Test Results**

i) Transverse Tensile Test :

In Combination with :

Base Material used :

Position of Welding :

P reheat Temperature :

P ostweld Heat Treatment :

Radiography :

Identification No.	U.T.S.	Fracture in	Remarks

2. **Guide Bend Test**

Position	ID No.	Root, Face or Side Bend	Remarks
	1		
	2		
	3		
	4		
	5		

3. **Any other tests**

Conclusions

Approved By :

EXHIBIT-B
Sheet 1 of 2

STRESS RELIEF HEAT TREATMENT PROCEDURE SPECIFICATION

Name of the Heat - Treatment :.....
Name of the Project :.....Specification
Re ference No. .....

1. **General Details**

Name of the Equipment : .....

Name of the Assembly/ Part : .....

Assembly/ Part Drawing No. : .....

Material : .....

2. **Furnace Details**

Type of Heating : Gas/ Oil/ Elec. Res./ Induction (Tick Mark)

Capacity (si e) : .....
Maximum Temp. (°C)

Method of temp. measurement : .....

Atmosphere Control : .....

3. **Heat Treatment Cycle Details**

Charging Temp. °C : .....

Rate of Heating, °C/Hr : .....

Soaking Temp., °C : .....

Soaking Time, Hrs. : .....

Rate of Cooling, °C/Hr : .....

Mode of Cooling : .....

4. Other Details, if any : .....

5. The following documents are to be furnished :
   along with these specification :

   i) Material Test Certificates

   ii) Assembly/ Part Details

EXHIBIT-C
Sheet 1 of 2

STANDARD PROCEDURE SPECIFICATION NO.

for ..... Welding of ..... Pipe and Fittings

Process & type ..... (Details of special machines).

Material ..... (Pipes to which the procedure applied, grade of steel, type of pipe, Reference Specification).

Diameter and wall thic kness ..... (Se ries of dia and thickness to which procedure is applicable)

oint Design .....

Filler Metal and Number of Beads .....

Electrical or Flame Characteristics .....

Position .....

Direction of We ldings ..... (Uphill, Downhill, Mixed)

Number of Welders .....

Time Lapse between passes .....

Type of Line-up Clamp .....

Removal of Line -up Clamp ..... (Minimum percentage of welding carried out before removal of clamps)

Cleaning .....

Preheat, Stress Relief .....

Shielding Flux .....

Speed of Travel .....

Sketches and Tabulations (to be attached) .....

Wire Speed (rate of wire speed and variation range) .....

Minimum No. of passes which must be completed before discontinuing weld.

Sheet 2 of 2

Minimum No. of welders required for the first pass and second pass :

Tested : ..... Welder .....

Approved : ..... Welding Supt. .....

Accepted : ..... Chief Engineer .....

EXHIBIT-D
Sheet 1 of 2

COUPON TEST RECORD

Location .....
Date ..... State ..... Roll Weld ..... Fixed position weld ..... welder ..... Mark ..... Welding Time ..... Time of day ..... M. Temperature ..... F. Weather Condition ..... Wing break used ..... Voltage ..... Amperage ..... Type of welding machine ..... Si e ..... Filler Metal ..... Si e of reinforcement ..... Pipe kind and Grade ..... Wall thickness ..... Dia O.D. .....

---

1 2 3 4 5 6 7

Bead No. ..... Si e of electrode ..... No. of electrode .....

---

1 2 3 4 5 6 7

Coupon Stenciled ..... Original Dimension of Plate ..... Original area of plate (inch^2) ..... Maximum Load ..... Tensile S/ in. plate area ..... Fracture Location .....

Procedure ualifying Test ualified
Welder Line Test Disqualified

Max. tensile strength ..... min. tensile strength .....

Avg. tensile strength ..... Remarks on tensile strength .....

1. .....

2. .....

3. .....

4. .....

Sheet 2 of 2

Remarks on Bend Tests

1. .....

2. .....

3. .....

4. .....

Remarks on Nick Tests

1. .....

2. .....

3. .....

4. .....

Other Tests .....

(Use back for additional remarks)

EXHIBIT-E

WELDER's IDENTIFICATION CARD

Name :

Identification :

Date of Testing :

Valid Unit :

Approval of Welding :

Welding Position :

Material :

Diameter :

Wall Thickness :

Type of Welding Consumable :

Approved By : Employe r s Signature with Seal

EXHIBIT-F
Sheet 1 of 1

RADIOGRAPHIC PROCEDURE FOR PIPE WELDING

1. Location
2. Date of Testing
3. Name of Supervised Contractor
4. Material
5. Dia. & Thickness
6. Type of Weld oint
7. Radiation Source (X-ray, gamma ray)
8. Type of equipment (external/ internal)
9. Intensifying screens and material
10. Filter type and placement mask, diaphragm le ad screen etc. adjacent to radiation sources or specimen.
11. Geometric relationship (source local spot si e, max and min so urce strength, object to film distance, radiation angle with respect to weld and film).
12. Limit of film coverage
13. Film type and make
14. Exposure Time
15. Processing (time temperature for development stop bath or rinse , fixation, washing, drying etc.)
16. Density
17. Sensitivity
18. Type of penetrameter

Approval of the COMPAN

Signature of CONTRACTOR
with seal

WELDING SPECIFICATION CHART

EXHIBIT-G
Sheet 1 of 2

Class :

Material Specification :

Pipes : API 5L Gr. X 60, API 5L Gr. B API 5L Gr. X 42

Fittings : A 105, A234 Gr. WPB. MSS-SP-75, Gr. WPH 42, MSS-S

Flanges : A 105, MSS-SP-44 Gr. F42, MSS-SP as Gr. WPH 60

Other : _____ 44 Gr. F6C

Base Metal of NCL :

Welding Processes : Groove oints : Butt

Root Pass SMAW Filler Pass SMAW Root Pass SMAW Filler Pass SMAW Filler oints/ Socket oints : SMAW

Welding Materials : Groove oints : Butt

Root Pass E6010G/ E7010G Filler Pass F7010G/ E8010G/ E8818G
Root Pass E7010/ E7018G/ E8018G Filler Pass F7016/ E7018G/ E80118G

Filler oints/ Socket oints : E7016/ E7018/ E7018G/ E8018G

Backing Page _____ Consumable :

Gases : Purging _____ Sheilding

Gas Composition : Purging _____ Sheilding

Preheating : 10 min for all welds, 100°C Post heating

Post weld heat treatment :

Holding temp. : 595-650 C Holding Time : 1 Hr. per inch thk
Rate of heating : 200 C/hr max. Min holding time : 1 hr.
Method of cooling : Controlled Rate of cooling : 200°C/hr max.

Mechanical property requirements :

Charpy V notch impact test valve :

Normal	:	22
Average	:	27
At temperature	:	0 °C
Hardness	:	300 HV10 (for weld & HA)

Code of fabrication : ANSI B31.8 API 1104 and welding specifications.

TECHNICAL NOTES

1. Welding, heat treatment and non destructive testing shall be carried ou t in accordance with the requirement of ANSI B31.8/ AP I-1104 and additional requirement specified in the specification. In case of conflict between code and specification more stringent conditions shall be applicable.

2. No welding shall be carried out without preheating the joint to 10°C (50 °F) when the ambient temperature is below 10°C (50 °F).

3. Preheat shall be applied while welding the following material as detailed below :

API 5L Gr. B	:	Thickness upto and inclusive of 12mm	100	°F min.
A 105	:			
MSS-SP-44 Gr. F60	:	Thickness beyond 12 mm	200 °F	
A 234 Gr. WPB	:			
MSS-SP-75-WPH 60				

4. For fillet welds complete we lding may be carried out using the electrodes recommended for filler passes.

5. All weldments & HA shall meet the hardne ss requirements of 300 HV10 during procedure qualification. If the hardness exceeds 300 HV10 the joints shall be heat treated at temp. 1100-1250 °F for one hour. The heating and c ooling rates shall be decided during procedure qualification subject to a max imum of 200 °C/Hr. Hardness testing shall be carried out by Vickers hardness tester during welding procedure qualification test only. No hardness test is required for production welds.

6. The electrodes used shall meet the following additional requirement :

Specification	UTS (Min.) (As welded)	Impact (As welded)
E7018-G	52.7 kg/mm^2	20 ft. lb. at 0°C
E7018-I	52.7 kg/mm^2	-
E6010	-	-
E6018	-	20 ft. lb. at 0°C

7. All the weldments & HA shall meet the impact test requirement of 20 ft. lb at 0°C.

ANNEXURE-2

1.0 DESTRUCTIVE TESTING OF WELDED JOINT - BUTT WELDS

1.1 Preparation

Having passed the visual and the non destructive inspection, the test weld shall be subjected to mechanical test.

After satisfactory completion of all visual and non destructive testing the procedure test weld shall be set aside for a period not less than 24 hours. No further work on the test weld and no cutting of test specimens from the weld be performed till a period of at least 24 hours has expired.

Weld specimens, for pipe diameter greater than or equal to 12.3/4 shall be taken from the positions indicated in Fig. 1 of this specification from areas as free from defect s as possible. For this reason it is n ecessary to take the previous non dest ructive tests into account. The minimum no. of tests to be carried out is given in Table-I of this specification.

The test shall be carried out at laboratories approved by COMPAN . The specimens shall be prepared in accordance wit h the figure giv en in the paragraphs which refer to the individual test.

Table-I

TYPE AND NUMBER OF TEST SPECIMENS FOR PROCEDURE QUALIFICATION TEST

Pipe Si e, Out-side diameter Inches	Number of Specimens									
	Tensil e API	Tensil e ISO	Nick Break	Root Bend	Face Bend	Side Bend	Macro	Hard-ness	Impa ct	Total
Wall Thickness inch (12.7mm) and under										
Under 2 3/8	0	0 2 2	0 0 0 0	0 4						
2 3/8 to 4 incl.	0	0 2 2	0 0 0 0	0 4						
Over 4 less than 12 3/4	2	0 2 2	2 0 2 2						12	24
12 3/4 and over	2	2 4 4	4 0 2 2						24	44
Wall Thickness inch (12.7mm)										
4 and smaller	0	2 0 0	0 2 0 0	0 4						
Over 4 less than 12 3/4	2	0 2 2	2 0 2 2						12	24
12 3/4 and over	2	2 4 0	0 8 2 2						24	44

1.2 **Tensile Strength**

Specimens for pipe diameter over 12 3/4 shall be taken from the position indicated in Fig. 1 of this specification. Two API type specimen shall be taken for pipe diameter greater than or equal to 12 3/4 .

1.3 **Nick-Break Test**

1.3.1 **Preparation**

Specimens for nick-break test with notches thus worked can break in the base metal, instead of in the fusion one therefore an alternative test piece may be used after authorisation by the COMPAN with a notch cut in the reinforcement of outside weld bead to a maximum depth of 1.5mm measured from the surface of the weld bead.

1.4 **Macroscopic Inspection**

1.4.1 **Preparation**

Specimens shall be taken from the positions indicated in Fig. 1 of this specification and shall be prepared in accordance with ASTM E2 and E3.

The width of the macrosection has to be at least three times the width of the weld. The section is to be prepared by grinding or polishing and etching to clearly reveal the weld metal and heat effected one.

1.4.2 **Method**

Specimens shall be carefully examined under the microscope with a magnification of at least 25 times. The COMPAN may ask for a macrograph with 5 times magnification for documentation purposes.

1.4.3 **Requirements**

Under macroscopic examination, the welded joints shall show good penetration and fusion, without any defect exceeding the limits stated in the evaluation criteria of the nick break test.

1.5 **Hardness Test**

1.5.1 **Preparation**

The prepared macrosection is to be used for hardness testing using the Vickers method with 100 N (10 kg) load. Indentations are to be made along traverses each approximately 1mm below the surface at both side of the weld.

In the weld metal a minimum of 6 indentations equally spaced along the traverses are to be made. The HA indentations are to be made along the traverses for approximately 0.5mm each into unaffected material, and starting as close to the fusion line as possible.

One indentation at each side of the weld along each traverse has to be made on parent metal. Reference is made to fig. 3 of this specification. The indentation are to be made in the adjacent region as well as on the opposite side of the macrosection along the specified traverses.

1.5.2 **Method**

The test shall be carried out in accordance with Recommendation ISO R81, Vickers hardness, using laboratory type machine controlled as per-recommendation of ISO R 146 and using a diamond pyramid penetrator set at 2.37 rad. (136) with a load of 100 N (10 kg).

1.5.3 **Requirements**

Hardness value shall not exceed 300 H VI0 . In case of a single reading slightly (10 HV) higher than the specified limit, further indentations should be made to check if the high value was an isolated case.

All the hardness values obtained from the heat effected one shall not exceed 100 HV with respect to the average hardness of the values obtained for the base metal.

If these additional tests mentioned above give a hardness within the specification limit, the slightly higher value may be accepted.

1.6 **Charpy-V-notch Impact Test**

1.6.1 Specimens shall be taken from the position indicated in Fig. 1 of this specification. The test specimens will be prepared in accordance with ISO R 148. Charpy V-notch specimens shall have dimensions as given in Fig. 3 of the specification.

Three test specimens shall be taken from each sample and they shall be cut and worked so that their length is transversal and perpendicular to the weld bead with the notch position as shown in Fig. 4 of this specification. The notch shall be perpendicular to the roller surface. The test specimens width shall depend upon the pipe wall nominal thickness as following :

Nominal wall thickness in mm	Test Specimens width in mm
12	12
9.5 and ≤ 12	7.5

≥ 7 and ≤ 9.5	5	
7		2.5

1.6.2 **Test Method**

The test shall be carried out as indicated in ISO R 148 Beam Impact Test V-notch.

Test pieces shall be immersed in a thermostatic bath and maintained at the test temperature for at least 15 minutes. They shall than be placed in the testing machine and broken within 5 seconds of their removal from the batch.

1.6.3 **Requirements**

The impact energy shall be greater or equal to :-

Test Specimens in mm	T	Average of three specimens oule (min) (Note-2)	Minimum Single Value oules (Note 1)
10		27	22
7.5	21.5	17.5	
5	18.5	15.0	
2.5	10.0	8.0	

Note:
1) Only one value is permitted to be lower than average upto the value specified.

1.7 **Bend Test Requirements**

The bend test specimens shall be made and tested as per the requirements of API-1104 sixteenth edition - May, 1983 except that the dimensions of ig for guided bend test fig. 5 para 2.6 API-1104 shall be modified as follows :

Radius of the plunger	°A	2 t	
Radius of the die	°B	3 t	1.6mm
Width of the die	°C	50.8	

The acceptance criteria shall howeve r be as per para 2.643 and 2.653 of AP I-1104 sixteenth edition - May, 1983.

Note t Thickness of Specimen (nominal)

ANNEXURE-3

1.0 ULTRASONIC INSPECTION

In addition to the radiographic inspection ultrasonic inspection is required as per conditions mentioned in **Annexure-1** of this specification.

This section concerns manual ultrasonic inspection. However ultrasonic inspection by automatic equipment may be used if approved by the COMPAN .

1.1 Equipment and Operators

The CONTRACTOR who carries out the ultrasonic inspection shall have sufficient qualified personnel, equipment and instrument at his disposal to be able to effect the tests without hindering or delaying the pipeline assembly operations.

Calibrate the equipment
Perform an operational test under production conditions
Interpret the screen picture
Evaluate the si e and location of reflectors
Interpret the type of defects detected.

The COMPAN has the option of checki ng the ability of personnel employed for ultrasonic testing by means of qualification tests.

The CONTRACTOR appointed to carry out UT inspection shall supply the instruments necessary for their execution on site.

1.2 Specification for Ultrasonic Testing Procedure

Qualificat ion

Before work begins the CONTRACTOR shall present a specification describing the proposed U.T. procedure qualification.

This specification shall be state, as an indication only but not limited to the following information :

Type of U.T. equipment used
Type and dimensions of transducers
Frequency range
Details for calibration
Coupling medium
Inspection technique
Record details
Reference to the welding procedure where it is intended to adopt the specification.
Temperature range of the joints to be inspected.

1.3 **Qualification of Ultrasonic Inspection Procedure**

The ultrasonic inspection procedure shall be approved by the COMPAN . Before inspection begins, the COMPAN may require the qualification test of the ultrasonic inspection procedure. This specification test consists in testing (under normal operating conditions) some CONTRACT OR welds made according to the same production procedure, when there are typical defects the test intends to detect.

1.4 **Test Procedure**

Circumferential weld shall be inspected from both sides using angled. Probes.

The surface with which the probe comes into contact shall be free of metal spatter, dirt, iron oxide and scales of any type: therefore it shall be necessary to clean a strip at least 50mm wide on both sides of the weld with steel - wire brushes and anyhow the cleaned strip must be atleast wide enough to allow full skip examination.

If during the test, echoes of doubtful origin appear, it shall be necessary to inspect a convenient area on the pipe surface, close to the weld, with a straight beam transducer in order to check whether any manufacturing defects are present which could have interfered with the ultrasonic beam.

By way of an example, the equipment shall include but not be limited to the following :

Ultrasonic equipment and coupling medium
Sample sections for calibration of instruments.
Equipment for cleaning of surface to be examined.
Rulers calibrated in centimeters for exact location of the position of defects.

The characteristics of the above-listed instruments and equipment shall guarantee:

a) that the required standards of the inspection procedure, as previously established and approved by the COMPAN , are satisfied.

b) continuous operation

All the instruments and equipment shall be approved by the COMPAN before being used. The COMPAN has the authority to reject any item which is considered unsuitable. The decision of the COMPAN is final. The CONTRACTOR appointed to carry out ultrasonic inspection shall also ensure the operational efficiency and maintenance of the instruments and equipment, and shall immediately substitute any item rejected by the COMPAN .

All the instrument and equipment necessary for carrying out ultrasonic inspection on site shall satisfy the requirements laid down by the public board of institutions which regulate safety at work .

1.5 **Ultrasonic Instruments**

The ultrasonic instruments :

Shall be each pulse type, able to generate, receive and display, on the screen a cathode ray tube (CRT) pulse, at frequencies between 1 and 6 mh . The useful part of the CRT screen shall be at least 70m wide and at least 50mm high.

Shall have various amplification, with steps of 1 or 2 dB over a range of a least 60 dB.

The regulation control shall be accurate to within 1 dB and this accuracy shall be certified by the instrument manufacturer.

May be powered by a battery or an electric generator. In the first case, the autonomy of operation (endurance) of the instrument shall be sufficient to carry on working without frequent interruptions, and the instrument shall be equipped with an automatic switch which switches it off when the battery runs down, in the second case, there must be a voltage stabilising device with a tolerance of 2 volts.

1.6 **Probes**

The probes used shall have dimensions, frequencies, and a refraction angle suited to the type of steel, the diameter the thickness of the pipeline and to the joint design.

1.7 **Reference Sample Pieces**

The efficiency of the equipment used, the effective refraction angle of the probe, and the beam output points, shall be checked using a V_1 and V_2 sample block, IIW type or the calibration block ASTM E-428.

For the calibration of runs and the regulation of detection sensitivity during the test, a calibration piece be used. This piece shall be taken from the production material, and will be at least 150mm long (measured in the direction of the axis), and at least 50mm wide (measured in the direction of the circumference), (see Fig. 4 of this specification).

In the middle of the inside and the outside surface of the calibration piece a groove shall be made. The groove will have a rectangular cross-section, a flat bottom and the following dimensions :-

Depth : 1 /- 0.1mm
Breadth (measured parallel to the 150mm side) : 1 /- 0.1mm
Length (measured parallel to the 50mm side) not less than 30mm.

In addition, the calibration piece shall have a hole, 2mm in diameter, passing through its thickness and positioned so that during calibration the echoes returning from the two grooves do not interfere with those returning from the hole.

1.6 **Calibration**

For a precise check of the sound paths necessary for a full inspection of the weld joint, the probe shall be mov ed (half skip and full skip distance) until internal and external notches on the test piece are detected (see Fig. 5 of this specification).

The relevant defect limit s the path lengths on the time base. The calibration of reference sensitivity is obta ined by utilising the throug h drilled test hole in the thickness of the reference b lock to draw the distance amplitude correction curve relevant to the test probe.

Calibration shall be carried out according to the following procedure : place its internal vertex until the maximum height of echo is d isplayed on the screen this echo is adjusted to 80 of full screen height by means of the sensitivity adjuster set in dB. Without varying the amplification, the probe placed at full skip distance from the hole is moved to detect the external vertex the hole until the maximum height of echo is obtained. The straight line co nnecting the peaks of the two echoes obtained by the above procedure, represents the 100 reference level, while the one connecting the two points at half height of the same echoes represents 50 reference level .

The two straight lines shall be marked on the screen with a pen. Calibration shallbe repeated each time tests are re-started at intervals not longer than 30 minutes during normal operations each t ime the conditions fixed in adv ance are alt ered. This calibration is applicable prov ided that the crystal of the probe is 8 x 9mm si e. Should this si e of the crystal be different, the value of the sensitivity obtained from the calibration by a cry stal of a different si e shall be brought to th e value of sensitivity obtained from the calibration by a 8 x 9mm crystal. The sensitivities of the two different si e probes shall be compared through the echoes obtained on the notch of the test piece with the probe position at half skip of the distance.

1.9 **Regulation of Amplification during Production Testing**

The amplification during production testing shall be obtained by adding 2- 6 dB (according to the surface co ndition of the pipe and its cleanness) t o the reference amplification.

1.10 **Qualification of Ultrasonic Testing Operators**

Before the inspection begins or during the same inspection, the COMPAN may require a qualification test for the ultrasonic equipment operators.

1.11 **Evaluation of Indications given by Ultrasonic Tests**

Each time that echoes from the weld bead appear during produc tion testing, the instrument amplification shall be altered to coincide with the reference amplifications and the probe shall be moved until maximum respond is obtained paying attention all the time to the probetube coupling.

If, under these conditions, the height of the defer echo is equal to or greater than that of the reference echo , the defect shall b e evaluated. If t he defect has also been detected by the radiographic and or visu al examination, the dimensions shall be judged according to the type of ex amination which dete cts the greater defects. Returns which are less than 50 of the reference echo, will not be considered. It returns are above 50 but lower than 100 of the reference echo, and if the operator has good re asons to su spect that the returns are caused by unfavorably oriented cracks, he shall inform the COMPAN . Moreover, when there is a defect to be repaired such defect shall be remov ed for a lengt h corresponding to the one where no more return echo is given.

1.12 **Other Equipment**

The use of rules calibrated in centimeters, attached if possible to the probe, for the precise location of the position of welding defects, it recommended. Defect location is effected by measuring the projection distance between the probe output and the reflecting surface.

The operators carrying out the tests shall have besides the probing instrument, tools for cleaning the pipe surface (files, brushes, etc.) as well as the coupling liquid or paste appropriate for the temperature of the section to be examined.

ANNEXURE-4

RADIOGRAPHY

1.0 **SCOPE**

This annexure covers the ra diographic inspection of all types of welded joints of the main pipeline. The welded joints shall include the following :

i) Full girth welds on the mainline construction including double jointing of pipe, if adopted.

ii) Welds for installation of block valves, insulating joints and other appurtenances and tie-ins.

iii) Welds at scraper launching and receiving barrels

iv) Terminal Piping.

2.0 **APPLICABLE STANDARDS**

This specification shall apply in conjunction with the following (all latest edition) :

i) API 1104, Standard for welding pipelines and related facilities.

ii) ANSI B31.8, code for Gas Transmission and Distribution Piping Systems.

iii) ANSI B31.4, Code for Liquid Petroleum Transportation Piping System.

iv) ASTM E94, Recommended practice for Radiographic Testing.

v) ASTM, E 142, Standard Method for Controlling uality of Radiographic Testing.

vi) The American Society for non-destructive Testing. Recommended Practice No. SNT-TC-1A Supplement-A.

3.0 **PROCEDURE**

3.1 The radiographic examination procedure to be adopted shall be submitted by the CONTRACTOR as per **Exhibit-F.**

3.2 The procedure of radiographic examination shall be qualified to the entire satisfaction of COMPAN prior to use. It shall include but not be limited to th e following requirements.

i) Lead foil intensifying screens, at th e rear of the film shall be used in all exposures.

ii) Type 2 and 3 films as per ASTM E-94 shall be used.

iii) A densitometer shall be used to de termine film density. The transmitted film density shall be 2.0 and 3.5 through out the weld. The unexposed base density of the film shall not exceed 0.30.

iv) Radiographic identification system and documentation for radiographic interpretation reports and their recording system.

3.3 The CONTRACTOR shall qualify each procedure in the presence of the COMPAN prior to use.

3.4 The procedure of radiographic examination shall produce radiographs of suffic ient density, clarity and contrast so that defects in the weld or in the pipe adjacent to the weld, and the outline and holes of the pentrameter are clearly discernible.

3.5 All the girth welds of mainline shall be subjected to 100 radiog raphic examination. The CONTRACTOR shall furnish all the radiographs to the COMPAN , immediately after processing them, together with the corresponding interpretation reports on approved format. The details of the radiographs alongwith the joint identification number shall be duly entered in a re gister and signed by the CONTRACTOR and submitted to the COMPAN for approval.

3.6 When the radiation source and the film are both on the outside of the weld and located diametrically opposite each o ther, the maximum acceptable length of film for each exposure shall not exceed the values given in Table 4 of API 1104. The minimum film overlap, in such cases, shall be 40mm. The ellipse exposure technique may be used on nominal pipe si es of 2 inch an d smaller provided that the source to film distance used is a minimum of 12 inches.

3.7 Three copies of each acceptable radiographic procedure (as o utlined in Specification no. MEC/S/O5/62/02) and thre e copies of radiographic qualification records, shall be supplied to COMPAN . One set of the qualifying radiographs on th e job shall be kept by the CONTRACTOR s authorised representative to be used as a standard for the quality of production radiographs during the job. The other two sets shall be retained by COMPAN for its permanent record.

3.8 Three copies of the exposure charts relating to material thickness, kilo voltage, source to film distance and exposure time shall also be made available to aCOMPAN by the CONTRACTOR.

3.9 The CONTRACTOR shall, on a daily basis, record for each radiograph (1) radiography number (2) approximate chainage of weld location, (3) whether or not the welds meet the specified acceptance standards and (4) the nature and approximate location of unacceptable defects observed. It must be possible to relate to a particular butt weld and welder on piping drawing and pipeline alignment drawing.

3.10 Each day s production of processed radiographs shall be properly packaged separately, identified by at least the (1) date, (2) radiographic unit, (3) job locations, (4) starting and ending progress survey stations and (5) shall include original and three copies of the daily radiographic recor d. The package shall be submitted to the COMPAN daily when possible, but in no event later than noon of the following day.

3.11 The CONTRACTOR shall provide all the necessary facilities at site, such as a dark room with controlled temperature, film viewer etc. to enable the COMPAN to examine the radiographs.

3.12 The CONTRACTOR, if found necessary, ma y modify the procedure of radiographic examination suiting the local conditions prevailing. This sha ll, however, be subject to the approval of the COMPAN .

3.13 COMPAN shall have free access to all the CONTRACTOR s work facilities in the field.

3.14 Any approval grante d by the COMPAN shall not relieve the CONTRACTOR of his responsibilities and guarantees.

4.0 RADIATION SOURCE

4.1 Radiographic examination shall be carried out using x- radiations. Radiographic examination by Gamma rays may be allowed, at the discretion of the COMPAN , in case of inaccessible joints.

4.2 Whenever possible, pipeline welds will be inspected by placing the radiation source inside the pipe, on the pipeline axis, with a radiation of 6.28 rad. (360°).

If it is impossible to place the radiatio n source inside the pi pe, the weld will be inspected with the source on the outside. An overlap of at least 40mm at the ends of each film shall be required to ensure that the first and last location increment numbers are common to successive films and to estab lish that no part of a weld has been omitted.

5.0 LEVEL OF QUALITY

The quality level of radiographic sensitivity required for radiographic inspection shall be at least equivalent to the values in Figure-6.

6.0 PENETRAMETERS

6.1 The image quality indicator (abbreviation : I I) shall be used for the qualification of the welding procedure and during normal line production. Radiographic sensitivity shall be measured with the wire image quality indicator (Penetrameter). The penetrameter shall be selected according to DIN 54109 or ISO 1027. For radiographs made with the source on the outside, a penetrameter shall be placed on each side of the film with the smaller wire of the penetrameter turned towards the end of the film itself. When a complete weld is radiographed in a single exposure using a sourc e inside the piping,

four penetrameters approximately equally spaced around the circumference shall be used. During the procedure qualification, I I shall be placed both on the source side and on the film side. The sensitivity obtained with I I on the source side shall not be less than the values shown in Fig. 6 of this specification.

The sensitivity limit may be considered to have been reached when the outline of the I I, its identification number and the wire of the required diameter show up clearly on the radiographs.

The COMPAN may authorise use of types of I I other than those planned, provided that they conform with recognised standards and only if the CONTRACTOR is able to demonstrate that the minimum sensit ivity level required is obtained. For th is demonstration, a test shall be carried out comparing the I I specified and the CONTRACTOR s to show up the identification number and other details of the proposed I I, which must be visible in the test radiograph.

7.0 **FILM IDENTIFICATION MARKERS**

All films shall be clearly identified by lead numbers, letters, and/ or markers. The image of the markers shall appear on the films, without interfering with the interpretation. These markers positions shall also be marked on the part to be radiographed and shall be maintained during radiography.

8.0 **PROTECTION AND CARE OF FILM**

8.1 All unexposed films shall protected and stored properly as per the requirements of API 1104 standard and ASTM E 94.

8.2 The exposed and une xposed film shall be protected from he at, light, dust and moisture. Sufficient shielding shall be supplied to prevent exposure of film to damaging radiation prior to and following the use of the film for radiographic exposure.

9.0 **RE-RADIOGRAPHY**

9.1 The weld joints shall be re-radiographe d in case of unsatisfactory quality of the radiographs, at the expense of the CONTRACTOR.

9.2 All the repaired weld joints shall be r e-radiographed at no extra cost to the COMPAN in the same manner as t hat followed for t he original welds. In a ddition, the repaired weld area shall be identified with the orig inal identification number plus the letter R to indicate the repair.

9.3 When evaluating repair film, radiographers shall co mpare each section (exposure) of the weld with the original film to assure repair was correctly marked and original defect removed.

9.4 The COMPAN will review prior to any repa ir of welds, all the radiographs of welds which contain, according to th e CONTRACTOR s interpretation, unacceptable defects.

The final disposition of all unacceptable welds shall be decided by the COMPAN .

10.0 **QUALIFICATION OF RADIOGRAPHERS**

10.1 Pipeline radiographers shall be qualified in according with the requirement of API 1104 and to the full satisfaction of COMPAN .

10.2 Certification of all the radiographers, qualified as per 10.1 above, shall be furnished by the CONTRACTOR to the COMPAN before a radiographer will be permitted to perform production radiography. The certificate record shall include :

i) Background and experience record
ii) Training course record
iii) Technical examination record
iv) Doctor s report on radiographer s Oaecuer 0-1 acquity eye test.
v) Date of qualification.

10.3 The radiographers shall be required to qualify with each radiographic procedure they use, prior to performing the work assigned to him in accordance with the specification.

11.0 **PRESERVATION OF RADIOGRAPHS**

11.1 The radiographs shall be processed to allow storage of films without any discoloration for at least three years. All the radiographers shall be presented in suitable folders for preservation alongwith necessary documentation.

11.2 All radiographs shall become property of the COMPAN .

12.0 **EQUIPMENT AND ACCESSORIES**

12.1 CONTRACTOR shall make necessary arrangement at his own expense, for providing the radiographic equipment, radiographic films and the accessories for carrying out the radiographic examination for satisfactory and timely completion of the job.

12.2 For carrying out the mainline radiographic examination the CONTRACTOR shall be equipped with suitable mobile / stationary type with rooms. These shall have all the required facilities for film processing. Film viewer used shall be equipped with the film illuminator that has a light source of sufficient intensity and can be suitably controlled to allow viewing film densities upto 4.0 without damaging the film.

13.0 **RADIATION PROTECTION**

13.1 CONTRACTOR shall be responsible for the protection and personal monitoring of every man with or near radiation sources.

13.2 The protection and monitoring shall comply with local regulations.

13.3 In view of visual ha ards in the ha ndling of radioac tive source of material, CONTRACTOR shall be solely responsible for complying with all ru les and regulations set forth by Atomic Energy Commission or an y other Government agencies of India in this regard and COMPAN shall not be responsible and shall be kept indemnified by the CONTRACTOR for default(s) of whatever nature by the Contractor. Safety equipment as considered adequate by the COMPAN for all necessary perso nnel shall be made available for use and maintained for immediate and proper use by the CONTRACTOR.

14.0 **DISPLAY OF SAFETY INSTRUCTIONS**

14.1 The safety provisions shall be brought to the notice of all concerned by display on a notice board at promine nt place at the work spot. The person responsible for the safety shall be named by the CONTRACTOR.

15.0 **ENFORCEMENT FOR SAFETY REGULATIONS**

15.1 To ensure effect ive enforcement of the rules and regulations relating to safety precautions, the arrangement made by the CONTRACTOR shall be open to inspection by COMPAN or its representatives.

16.0 **FIRST AID INDUSTRIAL INJURIES**

16.1 CONTRACTOR shall maintain first aid facilitie s for its employees and those of its sub-contractors.

16.2 CONTRACTOR shall mak e outside arrangements for ambulance service and for treatment of industrial injuries. Names o f those providing these services shall b e furnished to COMPAN prior to sta rt of work and their telephone no. shall be posted prominently in CONTRACTOR s field office.

16.3 All critical industrial injuries shall be reported promptly to the COMPAN and a copy of CONTRACTOR s report covering each personal injury re quiring the attention of physician shall be furnished to the COMPAN .

17.0 **NO EXEMPTION**

17.1 Not withstanding the above there is no thing in t hese clauses t o exempt the CONTRACTOR from the operation of any other act or rules in force.

Rev. : 0
Edition : 1

SPECIFICATION
FOR
SHOP & FIELD PAINTING

SPECIFICATION NO.: MEC/S/05/21/07

(OIL & GAS SBU)
MECON LIMITED
DELHI 110 092

CONTENTS

SL. NO.	DESCRIPTION
1.0	GENERAL
2.0	SCOPE
3.0	CODES & STANDARDS
4.0	EQUIPMENT
5.0	SURFACE PREPARATION
6.0	PAINT MATERIALS
7.0	PAINTING SYSTEMS
7.1	PRE-ERECTION/ PRE-FABRICATION AND SHOP PRIMING FOR CARBON STEEL, LOW TEMPERATURE CARBON STEEL & LOW ALLOY STEEL, STEEL STRUCTURES, PIPING AND EQUIPMENT ETC.
7.2	REPAIR OF PRE-ERECTION/ FABRICATION AND SHOP PRIMING AFTER ERECTION/ WELDING FOR CARBON STEEL, LOW TEMPERATURE CARBON STEEL & LOW ALLOY STEEL, ITEMS IN ALL ENVIRONMENTS.
8.0	FIELD PAINT SYSTEM FOR NORMAL CORROSIVE ENVIRONMENT (FOR CARBON STEEL, LOW TEMPERATURE CARBON STEEL & LOW ALLOY STEEL)
9.0	FIELD PAINT SYSTEM FOR CORROSIVE ENVIRONMENT (FOR CARBON STEEL, LOW TEMPERATURE CARBON STEEL AND LOW ALLOY STEEL)
10.0	FIELD PAINT SYSTEM FOR HIGHLY CORROSIVE AREA (FOR CARBON STEEL, LOW ALLOY STEEL) EXTERNAL SURFACE OF UNINSULATED COLUMNS, VESSELS, HEAT EXCHANGERS, BLOERS, PIPING, PUMPS, TOWERS, COMPRESSORS, FLARE LINES, STRUCTURAL STEEL ETC.
11.0	FIELD PAINT SYSTEM FOR CARBON STEEL STORAGE TANKS (EXTERNAL) FOR ALL ENVIRONMENTS
12.0	FIELD PAINT SYSTEM FOR CARBON STEEL AND LOW ALLOY STEEL STORAGE TANK (INTERNAL)
13.0	COATING SYSTEM FOR EXTRNAL SIDE OF UNDERGROUND CARBON STEEL, PLANT PIPING AND TANKS.
14.0	PAINTING UNDER INSULATION FOR (HOT, COLD & SAFETY) CARBON STEEL LOW TEMPERATURE CARBON STEEL & STAINLESS STEEL PIPING AND EQUIPMENT IN ALL ENVIRONMENT
15.0	INTERNAL PROTECTION OF CARBON STEEL WATER BOXES AND TUBE SHEETS OF COOLERS/ CONDENSERS.
16.0	FIELD PAINTING SYSTEM FOR GI TOWERS/ NON-FERROUS TUBE SHEET
17.0	STORAGE
18.0	COLOURS CODE FOR PIPING
19.0	IDENTIFICATION OF VESSELS, PIPING ETC.
20.0	PAINTING FOR CIVIL DEFENCE REQUIREMENTS
21.0	INSPECTION AND TESTING
22.0	GUARANTEE
23.0	QUALIFICATION CRITERIA O PAINTING CONTRACTOR.
24.0	PROCEDURE FOR APPROVAL OF NEW PAINT MANUFACTURERS.
ANNEXURE-I-	LIST OF RECOMMENDED MANUFACTURES
ANNEXURE-II-	LIST OF RECOMMENDED MANUFACTURE'S PRODUCTS.

PREPARED BY:	CHECKED BY:	APPROVED BY:	ISSUE DATE :
(Shalini Singh)	(Sunil Kumar)	(A.K. Johri)	Dec. 2008

1.0 **GENERAL**

1.1 These technical specifications shall be applicable for the work covered by the contract, and without prejudice to the various codes of practice, standard specifications etc. it is understood that contractor shall complete the work in all respects with the best quality of materials and workmanship and in accordance with the best engineering practice and instructions of Engineer-in-charge.

1.2 Wherever it is stated in the specification that a specific material is to be supplied or a specific work is to be done it shall be deemed that the same shall be supplied or carried out by the contractor.

Any deviation from this standard without within deviation permit from appropriate authority will result in rejection to job.

2.0 **SCOPE**

Scope of work covered in the specification shall include, but not limited to the following.

2.1 This specification defines the requirements for surface preparation, selection and application of paint on external surfaces of equipment, vessels, machinery, piping, ducts, steels structures, external & internal protection of storage tanks for all services RCC Chimney & M S Chimney with or without refractory lining and flare lines etc.

2.2 **Extent of Works**

2.2.1 The following surface and materials shall require shop, pre-erection and field painting.

a. All uninsulated C. S. & A. S. equipment like columns, vessels, drums, storage tanks, heat exchangers, pumps, compressors, electrical panels and motors etc.

b. All uninsulated carbon and low alloy piping fitting and valves (including painting of identification marks), furnace, ducts and stacks.

c. All items contained in a package unit as necessary.

d. All structural steel work, pipe, structural steel supports, walkways, handrails, ladders, platforms etc.

e. RCC/ MS chimneys with or without refractory lining & Flare lines.

f. Identification colour bands on all piping as required including insulated aluminium clad, galvanised, SS and non-ferrous piping.

g. Identification lettering/ numbering on all painted surface of equipment/ piping insulated aluminium clad, galvanised, SS and non-ferrous piping.

h. Marking/ identification signs on painted surfaces of equipment/ piping for hazardous service.

i. Supply of all primers, paints and all other materials required for painting other than owner's supply.

j. Over insulation surface of equipments and pipes wherever required.

k. Painting under insulation for carbon steel and stainless steel as specified.

l. Repair work of damaged/ preerection/ fabrication shop primer and weld joints at field.

2.2.2 The following surface and materials shall not be painted unless otherwise specified:

a. Uninsulated austentic stainless steel.

b. Plastic and/ or plastic coated materials.

c. Non ferrous materials like aluminium, galvanised "piping", "gratings" and "handrails" etc. except G. I. Towers.

2.3 Documents

2.3.1 The contractor shall perform the work in accordance with the following documents issued to him for executions of work.

a. Bill of quantities for piping, equipment, machinery and structure etc.

b. Piping line list.

c. Painting specifications including special civil defence requirement.

2.4 Unless otherwise instructed final painting on pre-erection/ shop primed pipes and equipments shall be painted in the field, only after mechanical completion and testing on system are completed as well as, after completion of steam purging wherever required.

2.5 Changes and deviations required for any specific job due to clients requirement or otherwise shall be referred to MECON for deviation permit.

3.0 CODES & STANDARDS

3.1 Without prejudice to the provision of clause 1.1 above and the detailed specifications of the contract, the following codes and standards shall be followed for the work covered by this contract.

IS:5	:	Colour coding
IS-101 and	:	Methods of test for ready mixed paint enamels.
IS-2379:1990	:	Indian standard for pipe line Identification –Colour code.
ASTM Vol. 6.01 and 6.03	:	American standard test methods for Paints and coatings.
ANSI A 13.1-1981	:	Scheme for Identification of piping systems American National Standard Institution.

3.2 Surface Preparation Standards:

Following standards shall be followed for surface preparations:

3.2.1 Swedish Standard : SIS-05 5900-1967/ ISO-8501-1-1998
(Surface preparation standards for painting steel surfaces).

This standard contains photographs of the various standards on four different degrees of rusted steel and as such is preferable for inspection purpose by the Engineer-in-Charge.

3.2.2 Steel structure painting Council, U.S.A (surface preparations specifications (SSPC-SP).

3.2.3 British standard (surface finish or Blast-cleaned for painting) BS:4232

3.2.4 National Associations of Corrosion Engineers, U.S.A. (NACE)

3.2.5 Various International Standards equivalent to swedish Standard for surface preparation are given in Table-I.

3.3 The contractor shall arrange, at his own cost, to keep a set of latest edition of any one of the above standards and codes at site.

3.4 The paint manufacturer's instructions shall be followed as far as practicable at all times. Particular attention shall be paid to the following:

a. Instructions for storage to avoid exposure as well as extremes of temperature.

b. Surface preparations prior to painting.

c. Mixing and thinning.

d. Application of paints and the recommended limit on time intervals between coats.

4.0 EQUIPMENT

4.1 All tools, brushes, rollers, spray guns, abrasive materials hand/ power tools for leaning and all equipments, scaffolding materials, shot/ wet abrassive blasting, water blasting equipments & air compressors etc. required to be used shall be suitable for the work and all in good order and shall be arranged by the contractor at site and in sufficient quantity.

Mechanical mixing shall be used for paint mixing operations in case of two pack systems except that the Engineer-in-Charge may allow the hand mixing of small quantities at his discretion.

5.0 SURFACE PREPARATION, SHOP COAT, COATING APPLICATION & REPAIR AND DOCUMENTATION

5.1 General

5.1.1 In order to achieve the maximum durability, one or more of following methods of surface preparation shall be followed, depending on condition of steel surface and as instructed by Engineer-in-Charge. Adhesion of the paint film to surface depends largely on the degree of cleanliness of the metal surface. Proper surface preparation contributes more to the success of the paint protective system:

a. Manual or hand tools cleaning.
b. Mechanical or power tool cleaning.
c. Blast cleaning.

5.1.2 Mill scale, rust, rust scale and foreign matter shall be removed fully to ensure that a clean and dry surface is obtained. The minimum acceptable standard in case of manual or hand tool cleaning shall be St. 2 or equivalent, in case of mechanical or power tool cleaning it shall be St. 3 or equivalent, in case of blast cleaning it shall be Sa 2½ or equivalent as per Swedish Standard SIS-055900-1967/ ISO-8501-1-1988. Where highly corrosive condition exits, then blast cleaning shall be Sa3 as per Swedish Standard.

Remove all other contaminants, oil, grease etc. by use of an aromatic solvent prior to surface cleaning.

5.1.3 Blast cleaning shall not be performed where dust can contaminate surfaces undergoing such cleaning or during humid weather conditions having humidity exceeding 85%.

5.1.4 Irrespective of the method of surface preparation, the first coat of primer must be applied on dry surface. This should be done immediately and in any case within 4 hours of cleaning of surface. However, at times of unfavourable weather conditions, the Engineer-in-Charge shall have the liberty to control the time period, at his sole discretion and / or to insist on recleaning, as may be required, before primer application is taken up. In general, during unfavourable weather conditions, blasting and painting shall be avoided as far as practicable.

5.1.5 The external surface of R.C.C. chimney to be painted be dry and clean. Any loose particle of stand, cement, aggregate etc. shall be removed by rubbing with soft wire brush if necessary, acid etching with 10-15% HCL solution about 15 minutes shall be carried out and surface must be thorought washed with water to remove acid & loose particles then dry completely before application of paint.

5.2 Procedure of Surface Preparation.

5.2.1 Blast Cleaning

5.2.1.1 Air Blast Cleaning

The surface shall be blast cleaned using one of the abrasives: $AL_2 0_2$ particles chilled casts iron or malleable iron and steel at pressure of 7kg. Cm^2 at appropriate distance and angle depending on nozzle size maintaining constant velocity and pressure. Chilled cast iron, malleable iron and steel shall be in the form of shot or grit of size not greater than 0.055" maximum in case of steel and malleable iron and 0.04" maximum in case of chilled iron. Compressed air shall be free form moisture and oil. The blasting nozzles should be venturei style with tungsten carbide or boron carbide as the material for liners. Nozzles orifice may vary from 3/16" to ¾". On completion of blasting operation, the blasted surface shall be clean and free from any scale or rust and must show a grey white metallic lusture. Primer or first coat of paint shall be applied within 4 hours of surface preparation. Blast cleaning shall bot be done out doors in bad weather without adequate protection or when there is dew on the metal which is to be cleaned, surface profile shall be uniform to provide good key to the paint adhesion (i.e.35to 50 μ). If possible vacuum collector shall be installed for collecting the abrasive and recycling.

5.2.1.2 Water Blast cleaning

Environmental, health and safety problems associated with abrassive blast cleaning limit the application of air blast cleaning in many installations. In such case water blast cleaning is resorted to.

Water blast cleaning can be applied with or without abrassive and high-pressure water blasting. The water used shall be inhibited with sodium chromate/ phosphate. The blast cleaned surface shall be washed thoroughly with detergents and wiped solvent and dried with compressed Air . For effective cleaning abrassives are used. The most commonly used pressure for high pressure water blast cleaning for maintenance surface preparation is 3000 to 6000 psi at 35-45 liters/ minute water volume and pressure upto 10000 psi and water volume of 45 liters/ minute provide maximum cleaning.

The wate blast cleaned surface shall be comparable to SSPC-SP-12/ NACE No. 5. The operation shall be carried out as per SSPC guidelines for water blast cleaning. The indicative values for sand injection is

Air : 300 to 400 Cu.ft/ min.

Water : 5-10 liter/ min. with corrosion inhibitor
Sand : 200-400 lbs/ hr.
Nozzle : 0.5 to 1" dia

Special equipments for water blast cleaning with abrasives now available shall be used.

5.2.2 Mechanical of Power tool cleaning

Power tool cleaning shall be done mechanical striking tools, chipping hammers, griding wheels or rotating steels wire-brushes. Excessive burnish of surface shall be avoided as it can reduce paint adhesion. On completion of cleaning, the detached rust mill scale etc. shall be removed by clean rags and/ or washed by water or stream and thoroughly dried with compressed air jet before application of paint.

5.2.3 Manual or hand tool cleaning

Manual or hand tool cleaning is used only where safety problems limit the application of other surface preparation procedure and hence dones not appear in the specifications of paint systems.

Hand tool cleaning normally consists of the following:

a. Hand descaling and/ or hammering
b. Hand scraping
c. Hand wire brushing

Rust, mill scale spatters, old coating and other foreign matter, shall be removed by hammering, scrapping tools, emery paper cleaning, wire brushing or combination of the above methods. On completion of cleaning, loose materials shall be removed from the surface by clean rags and the surface shall be brushed, swept, deducted and blown off with compressed air/ steam to remove all loose matter. Finally the surface may be washed with water and dried for effective cleaning.

5.3 **Non compatible shop coat primer**

The compatibility of finishing coat should be confirmed from the paint manufacturer. In the event of use of primer such as zinc rich epoxy, inorganic zinc silicate etc. as shop coat the pant system shall depend on condition of shop coat, if shop coat is in satisfactory condition showing no major defects, the shop

coat shall not be removed. The touch up primer and finishing coat(s) shall be identified for application by Engineer-in-Charge.

5.4 Shop coated (coated with primer & finishing coat) equipment should not be repainted unless paint is damaged.

5.5 Shop primed equipment and surface will only be 'spot cleaned' in damaged areas by means of power tool brush cleaning and then spot primed before applying one coat of filed primer unless otherwise specified. If shop primer is not compatible with field primer then shop coated primer should be completely removed before applications of selected paint system for particular environment.

5.6 For packaged units/ equipment, shop primer should be as per the paint system given in this specification. However, manufacturer's standard can be followed after review.

5.7 **Coating Procedure and Application:**

5.7.1 Surface shall not be coated in rain, wind or in environment where injurious airbone elements exists, when the steel surface temperature is less than 5° F above dew point when the relative humidity is greater then 85% or when the temperature is below 40° F.

5.7.2 Blast cleaned surface shall be coated with one complete application of primer as soon as practicable but in no case later than 4 hrs. the same day.

5.7.3 To the maximum extent practicable, each coat of material shall be applied as a continuous film uniform thickness free of probes. Any spots or areas missed in application shall be recoated and permitted to dry before the next coat is applied. Applied paint should have the desired wet film thickness.

5.7.4 Each coat shall be proper state of cure or dryness before the application of succeeding coat. Material shall be considered dry for recoating when an additional coat can applied without the development of any detrimental film irregularities such as lifting or loose of adhesion of the under coat. Manufacturer instruction shall be followed for intercoat interval.

5.7.5 When the successive coat of the same colour have been specified, alternate coat shall be tinted, when practical, sufficiently to produce enough contrast to indicate complete coverage of the surface. The tinting material shall be compatible with the material and not detrimental to its service life.

5.7.6 Air spray application shall be in accordance with the following:

a. The equipment used shall be suitable for the intended purpose, shall be capable of properly atomizing the paint to be applied, and shall be equipped with suitable pressure regulators and gauges. The air caps, nozzles, and needles shall be those recommended by the manufacturer of the equipment for the material beign sprayed. The equipment shall be kept in satisfactory condition to permit proper paint application.

b. Traps or separators shall be provided to remove oil and condensed water from the air. These traps or separators must be of adequate size and must be drained periodically during operations. The air from the spray gun impinging against the surface shall show condensed water or oil.

c. Ingredients shall be kept properly mixed in the spray pots or containers during application by continuous mechanical agitation.

d. The pressure on the material in the pot and of the air at the gun shall be adjusted for optimum spraying effectiveness. The pressure on the material in the pot shall be adjusted when necessary for change in elevation of the gun above the pot. The atomizing air pressure at the gun shall be high enough to properly atomize the paint but not so high as to cause excessive fogging of paint, excessive evaporation of solvent, or less by overspray.

e. Spray equipment shall be kept sufficiently clean so that dirt, dried paint, and other foreign materials are not deposited in the paint film.

Any solvents left in the equipment shall be completely removed before applying paint to the surface begin painted.

f. Paint shall be applied in a uniform layer, with overlapping at the edge of the spray pattern. The spray patterns shall be adjusted so that the paint is deposited uniformly. During application the gun shall be held perpendicular to the surface and at a distance which will ensure that a wet layer of paint is deposited on the surface. The trigger of the gun should be released at the end of each stroke.

g. All runs and sags shall be brushed out immediately or the paint shall be removed and the surface repainted.

h. Areas inaccessible to the spray gun shall be painted by brush: if not accessible by brush, daubers or sheepking shall be used.

i. All name plates, manufacturer's identification tags, machined surface instrument glass, finished flange faces, control valve items and similar items shall be masked to prohibit coating disposition. If these surface are coated, the component shall be cleaned and restored to its original condition.

j. Edges of structural shapes and irregular coated surface shall be coated first and an extra pass made later.

k. If spray gun shown choking, immediately dechoking procedure shall be followed.

5.7.7 Airless spray application shall be in accordance with the following procedure: as per steel structure paint manual vol. 1 & vol. 2. By SSPC, U.S.A., Airless spray relies on hydraulic pressure rather than air atomization to produce the desired spray. An air compressor or electric motor is used to operate a pump to produce pressures of 1,000 to 6.000 psi. Paint is delivered to the spray gun at this pressure through a single hose within the gun, a single paint stream is divided into separate streams, which are forced through a small orifice resulting in atomization of paint without the use of air. This result in more repaid coverage with less overspray. Airless spray usually is faster, cleaner, more economical and easier to use than conventional airspray.

Airless spray equipment is mounted on wheels, and paint is aspirated in a hose that sucks paint from any container, including drums. The unit shall have in built agitator that keep the paint uniformly mixed during the spraying. The unit shall consists of in built strainer. Usually very small quantities of thinning is required before spray. Incase of High Build epoxy coating (two pack), 30:1 pump ratios and 0.020-0.023" tip size will provide a good spray pattern. Ideally fluid hoses should no be less than 3/8" ID and not longer than 50ft to obtain optimum results.

In case of gun choking, decoking steps shall be followed immediately.

5.7.8 Brush application of paint shall be in accordance with the following:

a. Brushes shall be of a style and quality that will enable proper application of paint

b. Round or oval brushes are most suitable for rivets, bolts, irregular surfaces and rough or pitted steel. Wide flat brushes are suitable for large flat areas, but they shall not have width over five inches.

c. Paints shall be applied into all corners.

d. Any runs or sags shall be brushed out.

e. There shall be minimum of brush marks left in the applied paint

f. Surface not accessible to brushes shall be painted by spray, duubers, or sheepkin.

5.7.9 Manual application by sling (where 6 O ' clock position of pipe is not approachable)

A canvas strip (alternatively a tinplate strip) about 450mm wide and 1.5m longs is hold under the pipe by two men. Liquid coating poured on the sling at each side of the pipe. The men holding this sling move it up and down and walk slowly forward while fresh coating is poured on the pipe and they manipulate the sling so that an even coating is ontained all round the bottom. This work shall be done vey carefully and by experienced personnel. There shall bot be any formation of "Whiskers" and holes in the coating. The coating film shall be inspected by mirror.

5.7.10 For each coat the painter should know the WFT corresponding to the specified DFT and standardise the paint application technique to achieve the desired WFT. This is to be ensured in the qualification trial.

5.8 **Drying of Coated Surface**

5.8.1 No coat shall be applied unit the preceding coat has dried. The material shall be considered dry for re-coating when another coat can be applied without the development of any film irregularities such as lifting or loss of adhesion of undercoats. Drying time of the applied coat should not exced maximum specified for it as a first coat; if it exceeds the paint material has possible deteriorated or mixing is faulty.

5.8.2 No paint shall be force dried under condition which will cause checking, wrinkling blistering formation of pores, or detrimentally after the condition of the paint.

No drier shall be added to a paint on the job unless specifically called for in the manufacturer's specification for the paint.

Paint shall be protected from rain, condensation, contamination snow and freezing until dry to the fullest extent practicable.

5.9 **Repair of damaged paint surface.**

5.9.1. Where paint has been damaged in handling and in transportation, the repair of damaged coating of pre-creation/ fabrication shall be as given below.

5.9.2. Repair of damaged inorganic zinc silicate primer after erection/ weldding:

Quickly remove the primer from damaged area by mechanical scraping and emery paper to expose the white metal. Blast s clean the surfaces possible. Feather the primer over the intact adjacent surface surrounding the damaged area by emery paper.

5.9.3 Repair of damaged pre-erection and shop priming in the design temperature of 90° C to 500° C.

- Surface preparation shall be done as per procedure 5.9.2

- One coat of F-9 shall be applied wherever damaged was observed on pre-erection/ pre-fabrication/ shop primer of inorganic zinc silicate coating (F-9) shall not be applied if damaged area is not more than 5 x 5 cm.

5.10 **PAINT APPLICATION**

5.10.1 Shop priming/ pre-erection priming with F9 of F12 shall be done only on blasted surface.

5.10.2 Shop priming/ pre-erection priming with F-9 or F-12 shall be done only with airless spray.

5.10.3 For large flat surface field painting shall be done by airless spray otherwise brush can be used.

5.11 **Assessment of Painting Requirement**

The paint system to be applied for a specific job shall be arrived as sequentially as given below :

- Identify the environment from area classification details and chose the appropriate table.

- Identify the design temperature from the technical documents.

- Identify the specific field paint system and surface preparation requirement from the above identified table and temperature range.

- Identify the shop priming requirement from Table 7.1 based on compatibility of the above paint system.

- Identify the need of repair of shop primer and execute as per Table 7.2.

5.12 **Documentation.**

A written quality plan with procedure for qualification trials and for the actual work.
Daily progress report with dedtails of weather condition, particular of application no of coats and type of materials applied, anomolies, progress of work versus programme.
Result of measurement of temperature relative humidity, surface profile, film thickness, holiday detection, adhesion tests with signature of appropriate authority.
Particular of surface preparation and paint application during trials and during the work.
Details of non-compliance, rejects and repairs.
Type of testing equipments and calibration.
Code and batch numbers of paint material used.

TABLE-I (for clause 5.0)
SURFACE PREPARATION STANDARDS

S. NO.	DESCRIPTION	VARIOUS INTERNATIONAL STANDARDS (EQUIVALENT)				REMARK
		SWEDISH STANDARD SIS-05-5900 1967	SSPC-SP USA	NACE USA	BRITISH STANDARD BS-4232: 1967	
1.	MANUAL OR HAND TOOL CLEANING REMOVAL OF LOOSE RUST LOOSE MILL SCALE AND LOOSE PAINT, CHIPPING, SCRAPING, SANDING AND WIRE BRUSHING, SURFACE SHOULD HAVE A FAINT METALLIC SHEEN.	ST.2	SSPC-SP-2	- -		THIS METHOD IS APPLIED WHEN THE SURFACE IS EXPOSED TO NORMAL ATMOSPHERIC CONDITION WHEN OTHER METHODS CANNOT BE ADOPTED AND ALSO FOR SPOT CLEANING DURING MAINTENANCE PAINTING.
2.	MECHANICAL OR POWER TOOL CLEANING REMOVAL OF LOOSE RUST, LOOSE MILL SCALE AND LOOSE PAINT TO DEGREE SPECIFIED BY POWER TOOL CHIPPING, DESCALING, SANDING, WIRE BRUSHING AND GRINDIN, AFTER REMOVAL OF DUST, SURFACE SHOULD HAVE A PRONOUNCED METALLIC SHEEN.	ST.3	SSPC-SP-3	- -		-DO-

TABLE-I (for clause 5.0)
SURFACE PREPARATION STANDARDS

S. NO.	DESCRIPTION	VARIOUS INTERNATIONAL STANDARDS (EQUIVALENT)				REMARKS
		SWEDISH STANDARD SIS-05-5900 1967	SSPC-SP USA	NACE USA	BRITISH STANDARD BS-4232: 1967	
3.	BLAST CLEANING (AIR & WATER) THERE ARE FOUR COMMON GRADES OF BLAST CLEANING					
3.1 W	HITE METAL BLAST CLEANING TO WHITE METAL CLEANLINESS REMOVAL OF ALL VISIBLE RUST, MILL SCALE PAINT & FOREIGN MATTER 100% CLEANLINESS WITH DESIRED SURFACE PROFILE.	SA-3	SSPC-SP-5	NACE#1	FIRST QUALITY	WHERE EXTREMELY CLEAN SURFACE CAN BE EXPECTED FOR PROLONG LIFE OF PAINT SYSTEMS.
3.2	NEAR WHITE METAL BLAST CLEANING TO NEAR WHITE METAL CLEANLINESS, UNIT AT LEAST 95% OF EACH ELEMENTS OF SURFACE AREA IS FREE OF ALL VISIBLE RESIDUES WITH DESIRED SURFACE PROFILE.	SA 2 ½	SSPC-SP-10	NACE #2	SECOND QUALITY	THE MINIMUM REQUIREMENT FOR CHEMICALLY RESISTANT PAINT SYSTEM SUCH AS EPOXY, VINYL, POLYURETHANE BASED AND INORGANIC ZINC SILICATE PAINTS, ALSO FOR CONVENTIONAL PAINT SYSTEM USED UNDER FAIRLY CORROSIVE CONDITIONS TO OBTAIN DESIRED LIFE OF PAINT SYSTEM.

TABLE-I (for clause 5.0)
SURFACE PREPARATION STANDARDS

S. NO.	DESCRIPTION	VARIOUS INTERNATIONAL STANDARDS (EQUIVALENT)				REMARKS
		SWEDISH STANDARD SIS-05-5900 1967	SSPC-SP USA	NACE USA	BRITISH STANDARD BS-4232: 1967	
3.3	COMMERCIAL BLAST BLAST CLEANING UNIT AT LEAST TWO—THIRD OF EACH ELEMENT OF SURFACE AREA IS FREE OF ALL VISIBLE RESIDUES WITH DESIRED SURFACE PROFILE.	SA-2	SSPC-SP-6	No. 3	THIRD QUALITY	FOR STEEL REQUIRED TO BE PAINTED WITH CONVENTIONAL PAINTS FOR EXPOSURE TO MILDLY CORROSIVE ATMOSPHERE FOR LONGER LIFE OF THE PAINT SYSTEMS.
3.4	BRUSH-OFF BLAST BLAST CLEANING TO WHITE METAL CLEANLINESS, REMOVAL OF ALL VISIBLE RUST, MILL SCALE , PAINT & FOREIGN MATTER, SURFACE PROFILE IS NOT SO IMPORTANT.	SA-1	SSPC-SP-7	No. 4		

6.0 PAINT MATERIALS

Paint manufacturers shall furnish all the characteristics of paint material on printed literature, alongwith the test certificate for all the specified characteristics given in this specifications. All the paint materials shall be of first quality and conform to the following general characteristics as per the table 6.1, 6.2 and 6.3.

PAINT MATERIALS
TABLE NO.: 6.1 PRIMERS

S. No.	DESCRIPTION	P-2 P-	4 P-	6
1.	Technical Name	Chlorinated rubber Zinc Phosphpate primer	Etch primer/ wash primer	Epoxy zinc phosphate primer
2.	Type and composition	Single pack, air drying chlorinated rubber based medium plasticised with unsaponlfiable plasticizer, plgmented with Zic phosphate.	Two pack polyvinyl butyral resin medium cured with phosphoric acid solution pogmented with zic tetroxy choromate.	Tow component polyamide cured epoxy resin medium, pigmented with zinc phosphate.
3.	Volume solids (approx)	40%	7-8%	40%
4.	DFT (Dry dilm thickness) per coat (approx)	40-50μ 8-	10μ 40-	50μ
5.	Theoretical covering capacity in M2/ coat/ litre (approx)	8-10 8-	10 8-	10
6.	Welght per litre in kgs/ litre (approx)	1.3	1.2	1.4
7.	Touch dry at 30° C (approx)	30 minutes	2 hrs.	After 30 mins.
8.	Hard dry at 30° C (approx)	Min.: 8 hrs. Max.: no limitation	Min.: 2 hrs. Max.: 24 hrs.	Min.: 8 hrs. Max.: 3-6 months
9.	Over Coating Interval (approx.)	Min : 8 hrs Max : No limitation	Min : 4.6 hrs Max : 24 hrs	Min : 8 hrs Max : 3-6 months
10.	Pot life (approx) at 30° C for two component paints (approx).	Not applicable	Not applicable	8 hrs.
11.	Temperature Resistance	60°C	Not applicable	80°C

PAINT MATERIALS
TABLE NO.: 6.2FINISH PAINT

S. No	DESCRIPTION F-	2	F-3	F-6	F-7
1.	Technical Name	Acrylic polyurethane finish paint	Chlorinated r ubber based finish paint	Epoxy-High build finish paint	High build coaltar epoxy coating.
2.	Type and composition	Two-pack aliphatic isocynate cur ed acrylic finish paint	Single pack plasticised chlorinated rubber based medium with chemical and weather resistant pigments.	Tow- pack polyamide/ ployamine cured epoxy resin medium suitable pigmented.	Tow pack polyamide cured epoxy resin blended with coal/ tar medium, suitably pigmented.
3.	Volume solids (approx)	40%	40%	62%	65%
4.	DFT (Dry film thickness) per coat (approx)	30-40μ 40-	50μ 100-	125μ 100-	125μ
5.	Theoretical covering capacity in M2/ coat/ litre (approx)	10-13 8-	10	5-6	5-2-6.5
6.	Welght per litre in kgs/ litre (approx)	1.3 1.	2	1.4	1.5
7.	Touch dry at 30° C (approx)	1 hrs.	30 minutes	3 hrs.	4 hrs.
8.	Hard dry at 30° C (approx)	Overnight	8 hrs.	Overnight	48 hrs.
9.	Overcoating interval (approx)	Min.: Overnight (12) hrs. Max.: Unlimited	Min.: Overnight Max.: Unlimited	Min.: Overnight Max.: 5 day	Min.: 24 hrs. Max.: 5 day
10.	Pot life at 30° C for two component paints (approx).	6-8 hrs.	Not applicable	4-6 hrs.	4-6 hrs.
11.	Temperature Resistance	80°C	60°C	80°C	125°C

PAINT MATERIALS
TABLE NO.: 6.3 FINISH PAINTS

S. No	DESCRIPTION F	-8	F-9	F-11	F-12
1.	Technical Name	Self priming type surface tolerant high build epox y coating (Complete rust control coating)	Inorganic Z inc Slicate coating	Heat r esistant synthetic m edium based tw o pac k aluminum paint suitable upto 250°C dry temperature	Heat resistant silicone aluminum paint suitable upto 500° C temperature
2.	Type and composition	Two-pack epoxy resin based suitable pigm ented and capable pigmented and c apable of adhering to m anually prepared surface and old coating	A two-pack air drying self-curing solvent based inorganic zinc silicate coating.	Heat resistant synthetic medium based two pack aluminum paint suitable upto 250°C	Single pack silicone resin based medium with aluminum flakes.
3.	Volume solids (approx)	72%	60%	25%	20%
4.	DFT (Dry film thickness) per coat (approx)	100-125μ 65-	75μ 20-	25μ 20-	25μ
5.	Theoretical covering capacity in M2/ coat/ litre	6.0-7.2 8-	9	10-12	8-10
6.	Welght per litre in kgs/ litre (approx)	1.4	2.3 1.2 1.1		
7.	Touch dry at 30° C (approx)	3 hrs.	30 min.	3 hrs.	30 min.
8.	Hard dry at 30° C (approx)	24 hrs.	12 hrs.	12 hrs.	24 hrs.
9.	Overcoating interval (approx)	Min.: 10 hrs. Max.: 6 months	Min.: 8 hrs. at 20°C and 50% RH. Max.: Unlimited	Min.: 16 hrs. Max.: Unlimited	Min.: 16 hrs. Max.: Unlimited

S. No	DESCRIPTION F	-8	F-9	F-11	F-12
10.	Pot life (approx) at 30° C for two component paints (approx).	90 min.	4-6 hrs.	Not applicable	Not applicable
11.	Temperature resistance	80°C	400°C	250° C	500° C

F-14: Specially for mulated polyamine cured coal tal epoxy suitable for-45°C to 125°C for application under insulation
F-15: Two pack cold curved epoxy phenolic coating suitable for 45°C to 125°C for application under insulation
F-16: Eoxy siloxane anser coat 738

PAINT MATERIALS
TABLE NO. 6.4 FINISH PAINTS

Sl. No.	Description	F-14 F	-15	F-16 F	-17
1.	Technical name	Polyamine cured coal tar epoxy	Two-component Epoxy phenolic coating c ured with poly amine adduct har dner system (primer + intermediate coat + f inish paint)	Ambient temperature curing Poly Siloxane c oating / High build c old applied inorganic copolymer based alum inum coating s uitable for under insulation coating of CS and SS piping for high temperature service.	Two c omponent solvent f ree type high build epox y phenolic / novalac epox y phenolic c oating cured w ith Polyamine adduct har dner system.
2.	Type & composition	Specially formulated polyamine c ured coal tar epox y suitable f or application under insulation	Two pac k ambient temperature curing epox y phenolic c oating system s uitable for applic ation under ins ulation of CS / SS piping.	Amercoat 738 from Am eron Products, USA / Berger 938 f rom Berger Paints Ltd., or Intertherm 751 CSA f rom Akzo Nobel coating. Note : 6	Two c omponent solvent f ree type high build epox y phenolic / novalac epox y phenolic c oating cured w ith Polyamine adduct har dner system.
3. Volum e Solids (minimum)		70% 65% 60% 98-			100%
4. DFT (Dry Film thickness) per c oat (minimum)		125 µm	75 - 100 µm	75 - 100 µm 125-	150 µm
5. T heoretical covering capacity in M^2 / c oat / litre (minimum)		5.5	6.5-8.5 6.0-	8.0 6.5-	8.0
6.	Weight per liter in kgs/litre (max paint) (minimum)	1.5 1.7 1.3 1.7			
7.	Touch dr y at 30°C (maximum)	4 hrs.	2 hrs.	1 hr.	2 hrs.

Sl. No.	Description	F-14 F	-15	F-16 F	-17
8.	Hard dry at 30°C (maximum) Full cure 30°C (for im mersion / high temp. service)	24 hrs. 168 hrs.(7 days)	24 hrs. 168 hrs.(7 days)	16 hrs. -	24 hrs. 168 hrs.(7 days)
9. O	ver-coating interval	Min. 6 hrs. Max. 5 days	Min. 36 hrs. Max. 21 days	Min. 16 hrs. Max. Not applicable	Min. 16 hrs. Max. 21 days.
10.	Pot lif e at 30°C for two c omponent paints (minimum)	4 hrs.	1.5 hrs.	1 hr.	1 hr.
11. T	emperature Resistance (min.)	-45°C to 125°C under insulation	-45°C to 125°C under insulation (Note : 5)	Up to 400°C f or CS & SS under insulation	-45°C to 150°C for i mmersion service

Notes:

1. Covering capaci ty and D FT depends on method of application. Covering capacity speci fied abov e are theoretical. Al lowing the l oose dur ing the application, minimum specified DFT should be maintained.

2. All primers and finish coats should be cold cured and air drying unless otherwise specified.

3. All pai nts shal l be appl ied i n accordance with manufacturer's instruction for surface preparation, intervals, cur ing and appl ication. T he sur face pr eparation, quality and workmanship should be ensured.

4. Technical data sheets for all paints shall be supplied at the time of submission of quotations.

6.4 **List of recommended manufacturers**

The paint shall conform to the specifications given above and the best quality in their products range of the manufacturers listed in Annexure-I.

7.0 PA INT SYSTEM

The paint system should vary with type of environment envisaged in and around the plants. Three types of environment as given below are considered for selection of paint system. The paint system is also given for specific requirements.

Primers & finish coats covered in table nos. 7.0 to 15.0

PRIMERS

P-2 : Chlorinated Rubber Zinc Phosphate Primer

P-4 : Etch Primer/ Wash Primer

P-6 : Epoxy Zic Phosphate Primer

FINISH COATS/ PAINTS

F-2 : Acrylic- Polyurethane finish paint

F-3 : Chlorinated Rubber Finish Paint

F-6 : High Build Epoxy finish coating

F-7 : High Build Coal Tar epoxy coating

F-8 : Self-priming surface tolerant high build epoxy coating

F-9 : Inorganic Zinc Silicate Coating.

F-11 : Heat resistant Synthetic medium based Al uminum paint.

F-12 : Heat resistant Silicone Aluminum paint.

F-14 : Specially formulated polyamine-cured coal for Epox y coating

F-15 : Epoxy phenolic coating

F-16 : Epoxy Siloxane Coating : Amercoat 738

F-17 : Two component solvent f ree ty pe hi gh bui lt epox y phenolic / novalac epoxy phenolic coating cured with polyamine.

TABLE 7.1: PRE-ERECTION/ PRE-FABRICATION AND SHOP PRIMING FOR CARBON STEEL, LOW TEMPERATURE CARBON STEEL & LOW ALLOY STEEL, STEEL STRUCTURE, PIPING AND EQUIPMENT ETC.

S. No.	DESIGN TEMPERATURE IN °C	SURFACE PREPARATION	PAINT SYSTEM	TOTAL DF T IN MICRONS (MIN.)	REMARKS
7.1.1	-90 TO 400	SSPC-SP-10	1 COAT OF F-9	65-75	No overcoating is to be done
7.1.2	401 To 500	SSPC-SP-10	1 COAT OF F-12	40-50	Finish Coat at Site
7.1.3	-40 to 150 f or Structures, hand rails and Grating only	SSPC-SP-3	1 COAT OF F-9 OR 2 CO ATS O F P-7 @ 40μ DFT / COAT	65-75 OF F-9 OR 80 (P-7)	For Dam aged Area of m ore than 5 x 5 Cm2.

TABLE 7.2: REPAIR OF PRE-ERECTION/ PRE- FABRICATION AND SHOP PRIM ING AFTER ERECTION/ WELDING FOR CARBON STEEL LOW TEMPERATURE CARBON STEEL & LOW ALLOY STEEL, ITEMS IN ALL ENVIRONMENT.

S. No.	DESIGN TEMPERATURE IN °C	SURFACE PREPARATION	PAINT SYSTEM	TOTAL DFT IN MICRONS (MIN.)	REMARKS
7.2.1	-90 TO 400	SSPC-SP-3 (FOR REPAIR ONLY) SSPC-SP-10	1 COAT OF F-9	65-75	FOR DAMAGED AREA O F MO RE THAN 5X5 CM.
7.2.2	401 TO 550	SSPC-SP-3	1 COAT OF F-12	20	FOR DAMAGED AREA O F MO RE THAN 5X5 CM.

TABLE 8.0: FIELD PAINT SYSTEM FOR NORMAL CORROSIVE ENVIRONMENT (FOR CARBON STEEL, LOW TEMPERATURE CARBON STEEL & LOW ALLOY STEEL)

ALL NORMAL CORROSIVE AREAS SUCH AS OFF SITES EXTERNAL SURFACE OF UNINSULATED COLUMNS, VESSELS, HEAT EXCHANGERS, BLOWERS, PIPING, PUMPS, TOWERS, COMPRESSORS, STRUCTURAL STEEL WORKS, RCC CHIMNEY WITH OR WITHOUT REFRACTORY LINE INSIDE CHIMNEY (ALL ENVIRONMENTS), EXCLUDING TANK TOPS, FLARE LINES, D. M. PLANTS, INTERIOR OF TANKS ETC. FLARE LINES FOR NORMAL CORROSIVE ENVIRONMENT ALSO TO NE PAINTED AS PER TABLE 9.0

S. NO.	DESIGN TEMPERATURE IN C	SURFACE PREPARATION	PAINT SYSTEM		TOTAL DFT IN MICRONS (MIN.)	REMARKS
			FIELD PRIMER	FINISH PAINT		
8.1	-90 TO –15	SSPC-SP-10	REPAIR OF PRE-FABRICATION PRIMER 1 COAT OF F-9 @65- 75μ DFT/ COAT	NONE	65-75	No over coating to be done follow repair procedure only on damaged areas of pre-erection/ pre-fabrication primer/ coating F-9
8.2	-14 TO 60	SSPC-SP-10	REPAIR OF PRE-FABRICATION PRIMER 1 COAT OF F-9 @ 65- 75μ DFT/ COAT + 2 COATS OF P-2 @ 40μ DFT/ COAT 2 X 40 = 80	2 COATS OF F-3 @ 40 μ DFT/ COAT 2 X 40 = 80	225	
8.3	61 TO 80	SSPC-SP-10	REPAIR OF PRE-FABRICATION PRIMER 1 COAT OF F-9 @ 65- 75μ DFT/ COAT + 2 COATS OF P-6 @ 40μ DFT/ COAT 2 X 40 = 80	1 COATS OF F-6 @ 100 μ DFT/ COAT	245	

S. NO.	DESIGN TEMPERATURE IN C	SURFACE PREPARATION	PAINT SYSTEM		TOTAL DFT IN MICRONS (MIN.)	REMARKS
			FIELD PRIMER	FINISH PAINT		
8.4	81 TO 250	SSPC-SP-10	REPAIR OF PRE-FABRICATION PRIMER 1 COAT OF F-9 @ 65- 75μ DFT/ COAT	3 COATS OF F-11 @ 20 μ DFT/ COAT 3 X 20 = 60	125	
8.5	251 TO 400	SSPC-SP-10	REPAIR OF PRE-FABRICATION PRIMER 1 COAT OF F-9 @ 65- 75μ DFT/ COAT	2 COATS OF F-12 @ 20 μ DFT/ COAT 2 X 20 = 40	105	
8.6	401 TO 500	SSPC-SP-10	REPAIR AS PER 7.2.2	2 COATS OF F-12 @ 20 μ DFT/ COAT 2 X 20 = 40	80	

NOTE 1 : FOR MS CHIMNEY OR WITHOUT REFRACTORY LINING 8.3, 8.4 AND 8.5 SHALL BE FOLOWED.

NOTE 2 : FOR EXTENAL SURFACE OF RCC CHIMNEY: 2 COATS OF F-6 @ 100 μ DFT/ COAT TO OBBTAIN 2 X 100=200μ SHALL BE APPLIED AFTER MAKING SURFACE PREPARATION AS PER GUIDELINES IN 1.5

NOTE 3 : WHEREVER REQUIRED S.NO. 8.3 SHALL BE USED FOR 14°C TO 80°C AND S.NO. 8.2 WILL BE DELETED.

TABLE 9.0: FIELD PAINT SYSTEM FOR CORROSIVE ENVIRONMENT (FOR CARBON STEEL, LOW TEMPERATURE CARBON STEEL & LOW ALLOY STEEL)

FOR ALL CORROSIVE AREAS ABOVE GROUND WHERE H_2S, SO_2 FUMES OR SPILLAGE'S OF ACID/ ALKALI/ SALT ARE LIKELY TO COME IN CONTACT WITH SURFACE SUCH AS EXTERNAL SURFACE OF UNINSULATED COLUMNS, VESSELS, HEAT EXCHANGERS, BLOWERS, PIPING, PUMPS, TOWERS, COMPRESSORS, FLARE LINES, STRUCTURAL STEEL ETC.

S. NO.	DESIGN TEMPERATURE IN °C	SURFACE PREPARATION	PAINT SYSTEM		TOTAL DFT IN MICRONS (MIN.)	REMARKS
			FIELD PRIMER	FINISH PAINT		
9.1	-90 TO –15	SSPC-SP-10	REPAIR OF PRE-FABRICATION PRIMER 1 COAT OF F-9 @ 65-75μ DFT/ COAT	NONE	65-75	Repair of pre-erection/ pre fabrication primer shall be done wherever damage is observed.
9.2	-14 TO 80	SSPC-SP-10	REPAIR OF PRE-FABRICATION PRIMER 1 COAT OF F-9 @ 65-75μ DFT/ COAT + 1 COATS OF P-6 @40 μ DFT/ COAT	1 COATS OF F-6 @ 100 μ DFT/ COAT + 1 COAT OF F-2 @ 40 μ DFT/ COAT	225	Surface preparation is required only for repairing of damaged pre-erection/ fabrication primer
9.3	81 TO 400	SSPC-SP-10	REPAIR OF PRE-FABRICATION PRIMER 1 COAT OF F-9 @ 65-75μ DFT/ COAT	2 COATS OF F-12 @ 20 μ DFT / COAT 2 X 20 = 40	105	
9.4	401 TO 500	SSPC-SP-10	REPAIR 2S PER 7.2.2	2 COATS OF F-12 @ 20 μ DFT / COAT	80	

TABLE 10.0: FIELD PAINT SYSTEM FOR HIGHLY CORROSIVE (FOR CARBON STEEL, LOW TEMPERATURE CARBON STEEL & LOW ALLOY STEEL) EXTERNAL SURFACES OF UNINSULATED COLUMNS, VESSELS, HEAT EXCHANGERS, BLOWERS, PIPING PUMPS, TOWERS, COMPRESSORS, FLARE LINES, STRUCTURE STEEL ETC.

EXPOSED TO SPILLAGE OR FUMES OF HCL H_2S0_4, SALTY WATER IMPINGEMENT, CHLORIDE ETC.

S. NO.	DESIGN TEMPERATURE IN °C	SURFACE PREPARATION	PAINT SYSTEM		TOTAL DFT IN MICRONS (MIN.)	REMARKS
			FIELD PRIMER	FINISH PAINT		
10.1	-90 TO –15	SSPC-SP-10	REPAIR OF PRE-FABRICATION PRIMER 1 COAT OF F-9 65-75μ DFT/ COAT	NONE 65-	75	Repair of pre-erection/ fabrication primer shall be followed. No over coating is allowed
10.2	-14 TO 80	SSPC-SP-10	REPAIR OF PRE-FABRICATION PRIMER 1 COAT OF F-9 @ 65-75μ DFT/ COAT + 1 COATS OF P-6 @40 μ DFT/ COAT	2 COATS OF F-6 @ 100 μ DFT/ COAT = 2 X 100= 200 + 1 COAT OF F-2 @ 40μ DFT/ COAT	345 Sur	face preparation is required only for repairing of dam aged pre-erection/ fabrication primer.
10.3	81 TO 400	SSPC-SP-10	REPAIR OF PRE-FABRICATION PRIMER 1 COAT OF F-9 @ 65-75μ DFT/ COAT	2 COATS OF F-12 @ 20 μ DFT / COAT 2 X 20 = 40	105	
10.4	401 TO 500	SSPC-SP-10	REPAIR AS PER 7.2.2	3 COATS OF F-12 @ 20 μ DFT / COAT 2 X 20 = 40	80	

TABLE 11.0 : FIELD PA INT SY STEM FOR C ARBON STEEL STOR AGE TA NKS (EXTERNAL) FOR A LL ENVIRONMENTS.

S. NO.	DESIGN TEMPERATURE IN °C	SURFACE PREPARATION	PAINT SYSTEM		TOTAL DFT IN MICRONS (MIN.)	REMARKS
			FILED PRIMER	FINISH PAINT		
1.1 EXTERNAL SHELL. W IND G IRDERS APPARAT USES, RO OF T OPS O F ALL G ROUND T ANK INCLUDING T OP SIDE O F FLOATING ROOF OF O PEN T ANK AS W ELL AS CO VERED F LOATING RO OF AND ASSOCIATED STRUCTURAL WORK ROLLING AND STATIONARY LADDERS, SPIRAL STAIRWAYS, HAND TAILS FOR ALL ENVIRONMENTS FOR GRUDE OIL, LDO, HSD, ATF KEROSENE, GASOLINE, MOTOR SPIRIT, DM WATER, FIREWATER, RAW W ATER, POT ABLE W ATER, ACIDS, ALKALIS SOLVENTS AND CHEMICALS ETC.						
11.1.1	-14 TO 80	SSPC-SP-10	1 COAT OF F-9 @ 65-75μ DFT / COAT + 1 CO ATS OF P- 6 @40 μ DFT/ COAT 65 X 40 = 105	1 COATS O F F -6 @ 100 μ DFT/ COAT + 2 CO ATS OF F -2 @ 40μ DFT/ COAT 2 X 40 = 80	285	F-6 s hould be suitable f or occasional w ater immersion
11.1.2	81 TO 500	SSPC-SP-10	1 COAT OF F-9 @ 65-75μ DFT / COAT	2 COATS OF F-12 @ 20 μ DFT / COAT 2 X 20 = 40	105	
11.2 EXTERNAL SURFACE OF BOTTOM PLATE (SOIL SIDE) FOR ALL STORAGE TANKS.						
11.2	-14 TO 80	SSPC-SP-10	1 COAT OF F-9 @ 65-75μ DFT / COAT	3 COATS OF F - 7 @ 100 μ DFT / COAT 3 X 100 = 300	365 F	7 should be suitable f or immersion service of the pr oducts given.

TABLE 12.0 : FIELD PAINT SYSTEM FOR CARBON STEEL AND ALLOY STORAGE TANK: (INTERNAL)

S. NO.	DESIGN TEMPERATURE IN °C	SURFACE PREPARATION	PAINT SYSTEM		TOTAL DFT IN MICRONS (MIN.)	REMARKS
			FILED PRIMER	FINISH PAINT		
INTERNAL SURFACE OF UNDERSIDE OF FLOATING ROOF, INTERNAL STRUCTURAL OF CONE ROOF, BOTTOM PLATE, ROOF STRUCTURE, STEEL, LADDERS SUPPORTS FOR STORING GRUIDE OIL, LDO AND HSD (EXCLUDING WHITE OIL PRODUCTS)						
12.1	-14 TO 80	SSPC-SP-10	1 COAT OF F-9 @ 65-75μ DFT/ COAT	3 COATS OF F-7 @ 100μ DFT/ COAT 3 X 100 = 300	365	F7 should be suitable for immersion service of the products given.
12.2	BARE SHEEL OF INSIDE FLOATING ROOF TANK AND CONE ROOF TANK FOR PRODUCTS MENTIONED IN 12.1					
12.2.1	-14 TO 80	SSPC-SP-10	PHOSPHATING TREATMENT WITH PHOSPHATING CHEMICALS (2 COATS)	2 COATS OF @10 μ 2 X 10 = 20	20	
12.3	FLOATING CONE ROOF TANKS FOR PETROLEUM PRODUCTS SUCH AS ATF, GASOLINE, NAPHTHA, KEROSENE, MOTOR SPIRIT, INSIDE OF BOTTOM PLATE, UNDERSIDE OF FLOATING ROOF AND SHELL ABOVE MAXIMUM LIQUID LEVEL AND STRUCTURAL STEEL , LADDERS ETC.					
12.3.1	-14 TO 80	SSPC-SP-10	1 COAT OF F-9 @ 65-75μ DFT/ COAT	3 COATS OF F-6 @ 100μ DFT/ COAT 3 X 100 = 300	365	F-6 should be suitable for immersion service of petroleum produce like ATF, Kerosene, petrol etc.
12.4	BARE SHELL OF INSIDE OF FLOATING CONE ROOF TANKS FOR PRODUCTS MENTIONED IN 12.3					
12.4.1	-14 TO 80	SSPC-SP-10	1 COAT OF F-9 @ 65-75μ DFT/ COAT	NONE	65-75	No over coating is allowed same as per pre-erection primer, if any
12.5	INTERNAL PROTECTION IF FIXED ROOF TYPE STORAGE TANKS FOR POTABLE WATER: INSIDE OF SHELL, UNDER SIDE OF ROOF AND ROOF STRUCTURE INSIDE SURFACE BOTTOM PLATE AND STRURAL STEEL WORKS, LADDERS, WALKWAYS, PLATFORMS ETC.					
12.5.1	-14 TO 80	SSPC-SP-10	2 COAT OF F-6 @ 40μ DFT/ COAT 2 X 40 = 80	2 COATS OF F-6 @ 100μ DFT/ COAT 2 X 100 = 200	280	F-6 shall be suitable for immersion service.
12.6	D. M. (DEMINERALISED WATER) AND HYDROCHLORIC ACID (HCL): INTERNAL SHELL, BOTTOM PLATE AND ALL ACCESSORIES					
12.6.1	-14 TO 80	SSPC-SP-10	EBONITE RUBBER LINING AS PER SMMS SPECIFICATION 6-06-204			
12.7	EG TANKS (INTERNAL SHELL, BOTTOM PLATE ROOF AND ALL ACCESSORIES)					
12.7.1	ALL	SSPC-SP-10	3 COATS VINYL CHLORIDE CO-POLYMER AMERCOAT 23 @ 75μ / COAT		225	

S. NO.	DESIGN TEMPERATURE IN °C	SURFACE PREPARATION	PAINT SYSTEM		TOTAL DFT IN MICRONS (MIN.)	REMARKS
			FILED PRIMER	FINISH PAINT		
12.8	INSIDE PONTOON AND INSIDE OF DOUBLE DECK OF ALL FLOATING ROOFS.					
12.8.1	-14 TO 80	SSPC-SP-3	1 COAT OF F-8 @ 100μ DFT/ COAT	1 COATS OF F-6 @ 100 μ DFT/ COAT 1 X 100 = 100	200	
12.9	INTERNAL SURFACE OF AMINE & SOUR WATER STORAGE TANKS					
12.9.1	-14 TO 80	SSPC-SP-10	1 COAT OF F-9 @ 65-75μ DFT/ COAT 2 X 40 = 80	2 COATS OF F-15 @ 75 μ DFT/ COAT 2 X 75 = 150	215-225	

TABLE 13.0 : COATING SYSTEM FOR EXTERNAL SIDE OF UNDERGROUND CARBON STEEL PLANT PIPING AND TANKS

S. NO.	DESIGN TEMPERATURE IN °C	SURFACE PREPARATION	PAINT SYSTEM		TOTAL DFT IN MICRONS (MIN.)	REMARKS
			PRIMER FINISH	PAINT		
13.1	CARBON STEEL PLANT PIPING (UNDERGROUND)					
13.1.1	YARD COATING					
13.1.1.1	25 TO 60	SSPC-SP-10	1 COAT OF SYNTHETIC FAST DRYING PRIMER TYPE-B AS PER AWWA-C-203 (1991)	4mm THICK COALTAR COATING WRAPPING AS PER AWWA-C-203 IN 2 LAYER OF EACH 2mm THICKNESS	4mm C	TE coating shall confirm to 120/ 5 as per BS: 4164
13.1.2	OVER THE DITCH COATING					
13.1.2.1	25 Tto 60	SSPC-SP-10	1 COAT OF SYNTHETIC FAST DRYING PRIMER TYPE-B AS PER AWWA-C-203 (1991)	2 LAYERS OF COALTAR BASED TAPE COATING AS PER AWWA-C-203.	4 mm	
13.2	CARBON STEEL PLANT PIPING (UNDERGROUND)					
13.2.1	61 TO 400	SSPC-SP-10	1 COAT OF F-9 @ 65-75μ DFT/ COAT	NONE	65-75	
13.3	EXTERNAL SIDE OF UNINSULATED UNDERGROUND STORAGE TANKS:					
13.3.1	40 TO 80	SSPC-SP-10	1 COAT OF F-9 @ 65-75μ DFT/ COAT	3 COATS OF F-7 @ 100μ DFT/ COAT 3 X 100 = 300	365	
13.3.2	-90 TO –41 81 TO 400° c	SSPC-SP-10	1 COAT OF F-9 @ 65-75μ DFT/ COAT 1 COAT OF AMERCOAT 738 @ 250μ DFT/ COAT	NONE NONE	65-75 250	

TABLE 14.0 : PAINTING UNDE R INS ULATION FOR INS ULATED (HOT COLD S AFETY CA RBON STEEL, LOW ALLOY STEEL, LOW TEM PERATURE C ARBON STEEL & STA INLESS STEEL PIPING, STORAGE TANKS EQUIPMENTS IN ALL ENVIRONMENT

S. NO.	DESIGN TEMPERATURE IN °C	SURFACE PREPARATION	PAINT SYSTEM		TOTAL DFT IN MICRONS (MIN.)	REMARKS
			PRIMER FINISH	PINTS		
14.1	INSULATED CARBON STEEL, LOW ALLOY STEEL AND LTCS PIPING AND EQUIPMENT & TANKS					
14.1.1	-4 TO 125	SSPC-SP-10	REPAIR OF PRE-FABRICATION PRIMER F-9 @ 65-75μ DFT	2 C OATS O F F-14 @ 125μ DFT/ COAT 2 X 125 = 250 O R 3 COATS O F F-15= 3 X 80=240	315	For other temprature ranges no painting is required under insulation.
14.1.2 O	PERATING TEMPERATURE –45 TO 125° C BU T D ESIGN TEMPERATURE 126-400° C	SSPC-SP-10	REPAIR OF PRE-FABRICATION PRIMER F-9 @ 65-75μ DFT	3 C OATS O F F-12 @ 20μ DFT/ COAT 3 X 20 = 60	105-115	
14.2	INSULATED STAINLESS STEEL INCLUDING ALLOY-20- PIPING					
14.2.1	BELOW 0° C T O ALL MINUS TEMPRATURE	ALUMINUM SHEET ING W ITH ALUM INUM FO IL AND CHLORIDE FREE MINERAL SEALANT CONTAINING BARIUM CHROMATE SHALL BE APPLIED				If t he pi ping & equipments are already erected t hen surface shall be prepared by cleaning w ith emery paper and w ash/ flush with c hloride f ree DM water f ollowed by wiping w ith organic solvent
14.2.2	0 TO 120	SSPC-SP-10 (15-25μ SURFACE PROFILE)	NONE	2 COAT S OF F-1 4 @ 125μ DFT/ COAT 2 X 125 = 250 O R 3 COATS O F F-15= 3 X 80 = 240	250	

S. NO.	DESIGN TEMPERATURE IN °C	SURFACE PREPARATION	PAINT SYSTEM		TOTAL DFT IN MICRONS (MIN.)	REMARKS
			PRIMER FINISH	PINTS		
14.2.3	121 TO 500	SSPC-SP-10	NONE	3 CO ATS O F F-12 @ 20μ DFT/ COAT 3 X 20 = 60	60	No pre erection primer to be applied
14.2.4	501 TO 1000	SSPC-SP-10	NONE	1 COAT OF AMERCOAT 738 @ 150μ DFT/ COAT	150 O	nly Amorcoat 738 from Amoron is available for this temperature range.
14.2.5	CYCLIC SER VICE-196 T O 480 EX CEPTING –45 TO 120	SSPC-SP-10	NONE	1 COAT OF AMERCOAT 738 @ 150μ DFT/ COAT	150	
14.3	NO PAINTING REQUIRED FOR INSULATED MONEL, IN COLOY AND NICKEL LINES					

TABLE 15.0 : INTERNAL PROTECTION OF CARBON STEEL WATER BOXES AND TUBE SHEETS OF COOLERS/ CONDENSERS WATER BOXES, CHANNELS, PARTITION PLATES, END COVERS AND TUBE SHEETS ETC.

S. NO.	DESIGN TEMPERATURE IN °C	SURFACE PREPARATION	PAINT SYSTEM		TOTAL DFT IN MICRONS (MIN.)	REMARKS
			PRIMER FINISH	PAINT		
15.1	Upto 65	SSPC-SP-10	1 COATS OF F-6 @ 40μ DFT/ COAT	2 COATS OF F-7 @ 125μ DFT/ COAT 2 x 125 = 250	290	For C. S.
15.2	Upto 65 NON FERROUS AND BRASS TUBE SHEETS	SSPC-SP-10	1 COATS OF P-4 @ 8μ DFT/ COAT 1 COATS OF P-6 @ 40μ DFT/ COAT	2 COATS OF F-7 @ 125μ DFT/ COAT 2 x 125 = 250	300 FOR NON FERROUS SURFACE	

TABLE 16.0 FIELD PAINTING SYSTEM FOR GI TOWERS/ NON-FERROUS TUBE SHEET

S. NO.	DESIGN TEMPERATURE IN °C	SURFACE PREPARATION	PAINT SYSTEM		TOTAL DFT IN MICRONS (MIN.)	REMARKS
			FILED PAINT	FINISH PAINT		
16.1	Upto 65	SSPC-SP-10	1 COATS OF P-4 @ 8-10μ DFT/ COAT + 1 COAT OF P-6 @ 4μ DFT/ COAT	2 COATS OF F-2 @ 40μ DFT/ COAT 2 x 40 = 250	130	SHADE AS PER DEFENCE REQUIREMENTS
16.2	Upto 65 NON FERROUS AND BRASS TUBE SHEETS	SSPC-SP-10	1 COATS OF P-4 @ 8μ DFT/ COAT 1 COATS OF P-6 @ 40μ DFT/ COAT	2 COATS OF F-7 @ 125μ DFT/ COAT 2 x 125 = 250	300	

17.0 STOR AGE

17.1 All paints and painting materials shall be stored only in rooms to be arranged by contractor and approved by Engineer-in-Charge for the purpose. All necessary precautions shall be taken to prevent fire. The storage building shall preferably be separate from adjacent building. A signboard bearing the words " PAINT STORAGE NO NAKED LIGHT-HIGHLY INFLAMMABLE" shall be clearly displayed outside.

18.0 COLOUR CODE FOR PIPING

For identification of pipeline, the colour code as per Table 18.1 shall be used. Paint material for color-coding shall be as specified in this standard in clause- 6.0.

18.1 Colour coding scheme for pipe, equipment, machinery & structure:

SR. NO.	DESCRIPTION	GROUND COLOUR	FIRST COLOUR BAND	SECOND COLOUR BAND
18.1.1	ALL KINDS OF WATER			
	DRINKING WATER	Sea Gree	French Blue	Signal Red
	DE-MINERALISED WATER	-do-	Gulf Red	-
	COOLING WATER	-do-	French Blue	-
	BOILER FEED WATER	-do-	Gulf Red	-
	CONDENSATE	-do-	Light Brown	Signal Red
	QUENCH WATER	-do-	Dark Grey	-
	WASH WATER	-do-	Ganary Yellow	-
	PROCESS WATER	-do-	Oxide Red	-
	PROCESS WATER	-do-	Crimson Red	-
	FIRE WATER	Fire red	White	-
	SEA WATER	Sea Green		-
18.1.2 ST	EAM			
	VERY HIGH PRESSURE STEAM (VHP)	Aluminiumto IS2339	Signal Red	-
	HIGH PRESSURE STEAM (SH)	-do-	French Blue	-
	MEDIUM PRESSURE STEAM (SH)	-do-	Gulf Red	
	LOW PRESSURE STEAM (SL)	-do-	Canary Yellow	Canary Yellow
	DILUTION STEAM/ PURGE STEAM	-do-	Grey	

SR. NO.	DESCRIPTION	GROUND COLOUR	FIRST COLOUR BAND	SECOND COLOUR BAND
18.1.3 CO	MPRESSED AIR	Sky Blue	Signal Red	-
	PLANT AIR	-do-	Silver Grey	-
	INSTRUMENT AIR	-do-	French Blue	-
	NITROGEN	Canary Yello	Black	-
	OXYGEN	-do-	White	-
	CO_2	-do-	Light Grey	-
18.1.4 G	ASES			
	FUEL GAS AND SOUR GAS	Canary Yellow	Grey	Dark Violet
	CHARGE GAS	-do-	Signal Red	French Blue
	RESIDUE GAS, LPG	-do-	Oxide Red	White
	ACETYLENE	-do-	Service Brown	-
	SWEET GAS	-do-	Grey	-
18.1.5	ACIDS AND CHEMICALS			
	SULFURIC ACID	DARK Violet	Briliant Green	Light Orange
	NITRIC ACID	-do-	French Blue	-do-
	HYDROCHLORIC ACID	-do-	Signal Red	-do-
	ACETIC ACID	-do-	Silver Grey	-do-
	CAUSTIC	smoke Grey	Light Orange	-
	CHLORINE	Canary Yellow	Dark Violet	-do-
18.1.6 HY	DRO CARBONS			
	NAPTHAS	Dark Admiralty	Brilliant Green	Black
	PROPYLENE	Grey	-do-	Smoke Grey
	PROPYLENE C.G. (LIQ)	-do-	-do-	Gulf Red
	ETHYLENE GLYCOL	-do-	-do-	-
	ETHYLENE DICHLORIDE	-do-	Gulf Red	-
	BENZENE	-do-	Canary Yellow	-
	BUTADIENE	-do-	Black	
	ETHANE(LIQ)	-do-	Light Grey	French Blue
	PROPYLENE(LIQ)	Dark Admiralty	Signal Red	Black
	ETHYLENE(LIQ)	Grey	Light Grey	Black
	TAR	-do-	Signal Grey	Brilliant Green
	AROMATIC GASOLINE	-do-	Brilliant Green	Canary Yellow
	METHANOL (LIQ)	-do-	White	Gulf Red
	PYROLYSIS GASOLINE	-do-	Brilliant Green	Black
	MIXED C4(LIQ)	-do-	Signal Green	Light Brown
	LPG(LIQ)	-do-	Brilliant Gren	Dark Violet
	KEROSENE	-do-	-do-	-
	DIESEL OIL (WHITE)	-do-	-do-	-
	DIESEL OIL (BLACK)	Light Brown	-	
		-do-		
		-do-		

18.2 The colour code scheme is intended for identification of the individual group of the pipeline. The system of colour coding of a ground colour and colour bands superimposed on it.

18.3 Ground colours as given in Table 18.1 shall be applied throughout the entire length for uninsulated pipes, on the metal cladding & on surfaces covered by Clause 2.2.2, ground colour coating of minimum 2m length or of adequate length not to be mistaken as colour band shall be applied at places requiring colour bands. Colour band(s) shall be applied at the following location.

a. At battery limit points

b. Intersection points & change of direction points in piping ways.

c. Other points, such as midway of each piping way, near valves, junction joints of services appliances, walls, on either side of pipe culverts.

d. For zong stretch/ xard piping at 50M interval.

e. At start and terminating points.

18.4 **Identification Sign**

18.4.1 Flow direction shall be indicated by an arrow in the location stated in Para a,b,c & d and as directed by Engineer-in-charge.

18.4.2 Colours of arrows shall be black or white and in contrast to the colour on which they are superimposed.

18.4.3 Product names shall be marked at pump inlet, outlet and battery limit in a suitable size as approved by Engineer-in-charge.

18.4.4 Size of arrow shall be either of those given in 18.5.

18.5 **Colour Bands**

18.5.1 As a rule minimum width of colour band shall conform to the following table:

Nominal Pipe Size	Width : L(mm)
3" NB and below	25mm
Above 3" NB upto 6" NB	50mm
Above 8" NB upto 12" OD	75mm
Above 12" OD	100mm

Note: For insulated pipes, nominal pipe size means the outside diameter of insulation.
Nominal pipe size figures are to be inches.

18.5.2 Colour band(s) shall be arranged in the sequence shown in Table 18.1 and the sequence follows the direction of flow. The relative proportional width of the first colour band to the subsequent bands shall be 4:1, minimum width of any band shall be as per Clause 18.5.1.

18.5.3 Whenever it is required by the Engineer-in-charge to indicate that a pipeline carries a hazardous material, a hazard marking of diagonal strips of black and golden yellow as epr IS:2379 shall be painted on the ground colour.

18.6 Wherever it is required by the Engineer-in-charge to indicate that a pipeline carries a hazardous material, a hazard marking of diagonal strips of black and golden yellow as per IS:2379 shall be painted on the ground colour.

19.0 IDENTIFICATION OF VESSELS, PIPING ETC.

19.1 Equipment number shall be stenciled in black or white on each vessel, column, equipment & machinery (insulated or uninsulated) after painting. Line number n black or white shall be stenciled on all the pipelines of more than one location as directed by Engineer-in-charge, size of letters printed shall be as below :

Column & Vessels - 150mm(high)
Pump, Compressor and other machinery - 50mm (high)
Piping - 40-150mm

19.2 **Identification of storage tanks**

The storage tanks shall be marked as detailed in the drawing.

20.0 **PAINTING FOR CIVIL DEFENCE REQUIREMENTS**

20.1 Following items shall be painted for camouflaging if required by the client.

a. All columns
b. All tanks in offsites
c. Large vessels
d. Spheres

20.2 Two coats of selected finishing paint as per defence requirement shall be applied in a particular pattern as per 20.3 and as per the instructions of Engineer-in-charge.

20.3 **Method of Camouflaging**

20.3.1 Disruptive painting for camouflaging shall be done in three colours in the ratio of 5:3:2 (all matt finish).

Dark Green	Light Green	Dark Medium Brown
5	3	2

20.3.2 The patches should be asymmetrical and irregular.

20.3.3 The patches should be inclined at 30 degree to 60 degree to the horizontal.

20.3.4 The patches should be continuous where two surfaces meet at an angle.

20.3.5 The patches should not coincide with corners.

20.3.6 Slits and holes shall be painted and dark shades.

20.3.7 Width of patches should be 1 to 2 meters.

21.0 INSPECTION AND TESTING

21.1 All painting materials including primers and thinners brought to site by contractor for application shall be procured directly from manufacturers as per specifications and shall be accompanied by manufacturer's test certificates. Paint formulations without certificates are not acceptable.

21.2 Engineer-in-Charge at his discretion, may call for tests for paint formulations. Contractor shall arrange to have such tests performed including batchwise test of wet paints for physical & chemical analysis. All costs there shall be borne by the contractor.

21.3 The painting work shall be subject to inspection by Engineer-in-Charge at all times. In particular, following stagewise inspection will be performed and contractor shall offer the work for inspection and approval of every stage before proceeding with the next stage. The record of inspection shall ne maintained in the registers. Stages of inspection are as follows:

a. Surface preparation
b. Primer application
c. Each coat of paint

In addition to above, record should inculde type of shop primer already applied on equipment e. g. Redd oxide zinc chromate or zinc chromate or Red lead primer etc.

Any defect noticed during the various stages of inspection shall be rectified by the contractor to the entire satisfaction of Engineer-in-Charge before proceeding further. Irrespective of the inspection, repair and approval at intermidiate stages of work. Contractor shall be responsible for making good any defects found during final inspection/ guarantee period/ defect liability period as defined in general condition of contract. Dry film thickness (DFT) shall be checked and recorded after application of each coat and extra coat of paint should be applied to make- up the DFT specified without any extra cost to owner, the extra cost should have prior approval of Engineer-in-Charge.

21.4 **Primer Application**

After surface preparation the primer should be applied to cover the crevices, corners, sharp edges etc. in the presence of inspector nominated by Engineer-in-Charge.

21.5 The shades of successive coats should be slightly different in colour in order to ensure application of individual coats, the thickness of each coat and complete coverage should be checked as per provision of this specification. This should be approved by Engineer-in-Charge before application of successive coats.

21.6 The contractor shall provide standard thickness measurement instrument with appropriate ranges(s) for measuring.

Dry film thickness of each coat, surface profile guage for checking of surface profile in case of blast cleaning. Holiday directors and pinhole detector and positector whenever required for checking in case of immersion conditions.

21.7 Prior to application of paints on surface of chimneys the thickness of the individual coat shall be checked by application of each coat of same paint on M.S test panel. The thickness of paint on test panel shall be determined by using guage such as 'Elkomere'. This thickness of each coat shall be checked as per provision of this specification. This shall be approved by Engineer-in-Charge before application of paints on surface of chimney.

21.8 At the discretion of Engineer-in-Charge, the paint manufacturer must provide the expert technical service at site as and when required. This service should be free of cost and without any obligation to the owner, as it would be in the interest of the manufacturer to ensure that both surface preparation and application are carried out as per their recommendations.

21.9 Final inspection shall include measurement of paint dry film thickness. Adhesion Holiday detection check of finish and workmanship. The thickness should be measured at as many points/ locations as decided by Engineer-in-Charge and shall be within + 10% of the dry thickness, specified in the specifications.

21.10 The contractor shall arrange for spot checking of paint materials for Sp. Gr., flow time (ford cup) and spreading rate.

22.0 **GUARANTEE**

22.1 The contractor shall guarantee that the chemical and physical properties of paint materials used are in accordance with the specifications contained herein/ to be provided during execution of work.

22.2 The contractor shall produce test report from manufacturer regarding the quality of the particular batch of paint supplied. The Engineer-in-Charge shall have the right the test wet samples of paint at random, for quality of same as stipulated in clause 11 above. Batch test report of manufacturer's for each batch paint supplied shall be made available by the contractor.

23.0 **QUALIFICATION CRITERIA OF PAINTING CONTRACTOR**

Painting contractor who is awarded any job for MECON, projects under this standard must have necessary equipments, machinery, tool and tackles for surface preparation, paint application and inspection. The contractor must have qualified trained and experienced surface preparation, paint applicator, inspector, and supervisors. The contractor supervisor, inspector surface perpetrator and paint applicator must be conversant with the standards referred in this specification the contractors capacity, capability and competency requirements for the job shall be quantified in the tender document and shall be assessed by an MECON team before awarding any job.

24.0 **PROCEDURE FOR APPROVAL OF NEW COATING MATERIALS AND MANUFACTURER'S**

Following procedure is recommended to be followed for approval of new manufacturers.

24.1 The manufacturer should arrange testing of the inorganic zinc silicate coating materials as per the list of tests given in para 24.5 below from one of the reputed Government laboratories.

24.2 Samples of coating should be submitted to the Govt. laboratory in sealed containers with batch no. and test certificate on regular format of manufacturer's testing laboratory. The sampling shall be certificate and sealed by a citifying agency.

24.3 All test panels should be prepared by govt. testing agency coloured photographs of test panels should be taken before and after the test should be enclosed alongwith test report.

Sample batch. No. and manufacturer's test certificate should ne enclosed alongwith the report. Test reports contain details of observation and rusting if any, as per the testing code. Suggested government laboratories are:

RRL, Hayderabad
HBTI, Kanpur
DMSRDE, Kanpur
IIT, Mumbai
BIS Laboratory
UDCT, Mumbai
RITES, Calcutta
PDIL

24.4 Manufacturers should intimate the company, details of sample submitted for testing name of Govt. testing agency, date, contact personnel of the Govt. testing agency. At the end of the test the manufacturer should submit the test report to the company for approval. The manufacturer(s) shall be qualified based on the result of these tests and other assessment and the Company's decision in this regard shall be final and binding on the manufacturer.

24.5 Tests required for evaluation of acceptance of coating materials for offshore application.

Test	ASTM Test Method
Density	D 1475
Dipping properties	D 823
Film Characteristics	
Drying time	D 1640
Flexibility	D 1737/ D 522
Hardness	D 3363
Adhesion	D 2197
Abrasion resistance	D 968/ D 1044
DFT/ Coat	AS PER SSPC GUIDELINES
Storage Stability	D 1849
Resistance to	
Humidity for 2000 hrs.	D 2247
Salt Spray for 2000 hrs.	B 117
Accelerated Weathering	D 822
% Zn in DFT	G 53

24.6 Coating sy stem f or panel test shal l be decided after discussion with MECON.

ANNEXURE-I

LIST OF RECOMMENDED MANUFACTURERS

Indian Vendors

1.0 Asian Paints(I) Ltd.
2.0 Berger Paints Ltd.
3.0 Goodlass Nerlolac Paints Ltd.
4.0 Jenson And Nicholson Paint Ltd & chokuGu Jenson & Nicholson Ltd.
5.0 Shalimar Paints Ltd.
6.0 Sigma Coating, Mumabai
7.0 CDC Carboline Ltd.
8.0 Premier Products Ltd.
9.0 Coromandel Paints & Chemicals Ltd.
10.0 Anupam Enterprises
11.0 Grand Polycoats
12.0 Bombay Paints Ltd.
13.0 Vanaprabha Esters & Glycer, Mumbai
14.0 Sunil Paints and Varnishes Pvt. Ltd.
15.0 Courtaulds Coating & Sealants India (Pvt.) Ltd.
16.0 Mark-chem Incorporated, Mumbai (for phosphating chemicals only)
17.0 VCM Polyurethane Paint (for polyurethane Paint only)

FOREIGN VENDORS FOR OVERSEAS PRODUCTS

1.0 Sigma Coating, Singapore
2.0 Ameron, USA
3.0 Kansai Paint, Japan
4.0 Hempel Paint, USA
5.0 Valspar Corporation, USA
6.0 Courtaulds Coating, UK.

Note: This list subjected to rev ision based fresh approv al w hich w ill be intim ated to PDD/ Vendor Cell.

ANNEXURE-II

LIST OF RECOMMENDED MANUFACTURER'S PRODUCTS

S. No.	MANUFACTURER NAME	P2 CHLORINATED RUBBER Zp PRIMER	P4 ETCH PRIMER/ WASH PRIMER	P6 EPOXY ZINC PH. PRIMER	F9 INORGANIC ZINC SILICATE PRIMER/ COATING
1.	ASIAN PAINTS (I) LTD.	ASIOCHL OR HB. ZN.PH PRIMER RO PC 168	APCONYL WP 636 (PC 335)	APCODUR HB. RO.ZP-PC433	APCOCIL 605
2.	BARGER PAINT LTD.	LINSOL HIGH BUILD ZP PRIMER	BISON WASH PRIMER	EPILUX 610	ZINC ANODE 304
3.	AMERON/ GODDLASS NEROLAC PAINTS LTD.	-	AMERCOAT 187	AMERCOAT 71	DIMET COTE-9
4.	JENSON & NICHOSON PAINTS LTD. AND CHOKUGU JENSON NICHOLSON	JENSOLAC CHLORINATED RUBBER HB ZN.PH. PRIMER	J & N ETCH PRIMER	EPILAC ZINC PHOSPHATE PRIMER	-
5.	SHALIMAR PAINTS LTD.	CHIOROKOTE ZINC PHOSPHATE PRIMER GREY	TUFFKOTE ETC PRIMER	EPIGUARD 4 ZINC PHOSPHATE PRIMER GREY	TUFFKOTE ZILICATE TL
6.	SIGMA COATING	SIGMA NUCOL UNICOAT 7321	SIGMA COVER PRIMER (7413)	COLTURE CM PRIMER 7412	SIGMASIL MC (7568)
7.	CDC CARBOLINE LTD.	-	-	CARBOLINE 893	CARBOZINC 11
8.	PRIMER PRODUCTS LTD.	- -		P-15/3A U-16/92	U17/ 92 ETHYL SILICATE INORGANIC ZINC
9.	CORAMANDEL PAINTS CHEMICALS LTD.	COROCLORE CR HB. ZN. PH. PRIMER	CPC WASH PRIMER	COROPEX EPOXY ZH. PH. HIGH BILD PRIMER	-

S. No.	MANUFACTURER NAME	P2 CHLORINATED RUBBER Zp PRIMER	P4 ETCH PRIMER/ WASH PRIMER	P6 EPOXY ZINC PH. PRIMER	F9 INORGANIC ZINC SILICATE PRIMER/ COATING
10.	ANUPAM ENTERPRISES	ANUCHLOR ZP PRIMER	ANUPRIME 291	ANUPAM ANILICOR A-EZP-500	-
11.	GRAND POLYCOATS	GP CHILOROPRIME 601	GP PPRIME 401	-	-
12.	BOMBAY PAINTS LTD. THEMPEL MAKINE PAINTS	HEMPA TEX HIGHBUILD 4633	PENTOLITE WASH PRIMER 8520	HEMPEL'S SHOP PRIMER E-1530	GALVASOL 1570
13.	VANAPRABHA ESTERS & GLYCERIDES,	VEGCHLOR HB PRIMER 1143	VEG WASH PRIMER 1181	VEGPOX 1241 Z/ P	-
14.	SUNIL PAINTS AND VARNISHED PVT. LTD.	SUNCHLOR HB ZINC PHOSPHATE PRIMER	SUN WASH	SUNPOXY ZINC PHOSPHATE PRIMER	-
15.	COURTAULDS COATING LTD.	- -		INTERGARD 251	INTERZINC
16.	MARK-CHEM INCOPORATED, (FOR PHOSPHATING CHEMICAL ONLY)	RUST PREVENTIVE LIQUID DRSAIO			
17.	VCM POLYURETHANE PAINTS (FOR POLY EURETHANE PAINTS ONLY)				
18.	JOTUN PAINTS			EPOXY CQ	JOTACOTE – 2

S. No.	MANUFACTURER NAME	P2 CHLORINATED RUBBER Zp PRIMER	P4 ETCH PRIMER/ WASH PRIMER	P6 EPOXY ZINC PH. PRIMER	F9 INORGANIC ZINC SILICATE PRIMER/ COATING
				SPECIAL ZINC PHOSPHATE PRIMER	
19.	KCC PRODUCTS (KOREA)				EZ 180(N)

LIST OF RECOMMENDED MANUFACTURER'S PRODUCTS (Contd….)

S. No.	MANUFACTURER NAME	F2 ACRYLIC-POLY YURETHANE FINISH PAINT	F3 CHLORINATED RUBBER FINISH PAINT	F6 HIGH BUILD FINISH PAINT	F7 HIGH BUILD COAL TAR EPOXY COATING
1.	ASIAN PAINTS (I) LTD.	APCOTHANE CF76 (PC 1109)	ASIOCHLOR CF 621 (PC 161)	APCODUR HB COATING 9466	APCODUR CF 300
2.	BARGER PAINT LTD.	BARGER THANE ENAMEL (81)	LINOSOL CHLORINATED RUBBER HB COATING	EPILUX 04 AND 78 HB EPOXY COATING	EPILUX 555
3.	AMERON/ GODDLASS NEROLAC PAINTS LTD.	AMERCOAT 450GL	AMERCOAT 515	AMER COAT 383 HS	AMERCOAT 78 HB
4.	JENSON & NICHOSON PAINTS	J & N 993 HB POLYURETHANE	JENSON HB CHLORINATED	EPILAC 981 ENAMEL	EPILAC SOLVENTLESS COAT

S. No.	MANUFACTURER NAME	F2 ACRYLIC-POLY YURETHANE FINISH PAINT	F3 CHLORINATED RUBBER FINISH PAINT	F6 HIGH BUILD FINISH PAINT	F7 HIGH BUILD COAL TAR EPOXY COATING
	LTD. AND CHOKUGU JENSON NICHOLSON	FINISH PAINT.	RUBBER FINISH PAINT		TAR EPOXY COATING
5.	SHALIMAR PAINTS LTD.	SHALITHANE FINISH	CHLORKOTE FINISH	EPIGARD KL FINISH	BIPIGARD'S BLACK HB COAL TAR EPOXY COATING
6.	SIGMA COATING	SIGMADOUR HS SEMIGLOSS 7530	SIGMA NUCOL FINISH 7308	SIGMA COVER CM 7456	COLTURIET TCN 300
7.	CDC CARBOLINE LTD.	CARBOLINE 132	-	CARBOLINE 191	CARBOMASTIC-14
8.	PRIMER PRODUCTS LTD.	U3/ 92 POLYURETHANE	CR-71 FINISH PAINT	42B/ 4A HIGH BUILD EPOXY	350B/ 3A, COAL TAR EPOXY COATING
9.	CORAMANDEL PAINTS CHEMICALS	- CO	ROCLORE CR FINISHING	COROPEX EPOXY HB COATING	COROPEX EPOXY COAL TAR COATING
10.	ANUPAM ENTERPRISES	ANUTHANE ENAMEL	ANUCHLOR HB ENAMEL	DURACOAT-6000 CO	ROGUARD
11.	GRAND POLYCOATS	GP COAT 131, 132 GP BOND 141	GP CHILOROGAURD 631	GP GUARD HP 234	POLYGUARD GE

LIST OF RECOMMENDED MANUFACTURER'S PRODUCTS

S. NO.	MANUFACTURER'S NAME	F2 F3		F6	F7
12.	BOMBAY PAINTS LTD./ PAINTS	PENTATHANE FP 4510	HEMPATEX HIBUILD 4633	HEMPADUR HIGH BUILD 5520	HEMPADUR 1510
13.	VANAPRABHA ESTERS & GLYCERIDES,	VEGTHANE FP 3641	VEGCHLOR FP 3140	VEGPOX- 3265 VEGPOX 3562	VEGPOX 4265
14.	SUNIL PAINTS AND VARNISHED PVT. LTD.	SUNTHANE (ALIPHATIC)	SUNCHLOR HB CR COATING	LPOXY HB 'PS 901'	LPOXY BLACK P. S. 551
15.	COURTAULDS COATING LTD.	INTERTHANE -		INTEGARD EM SERIES	INTERTUF JXA 006/ 007/ 010
16.	MARK-CHEM INCOPORATED, (FOR PHOSPHATE PAINTS ONLY)				
17.	VCM POLYURETHANE PAINTS (FOR POLY EURETHANE PAINTS ONLY)	PIPCOTHANE ALIPHATIC POLYURETHANE FINISH PAINT			
18.	JOTUN PAINTS	HARDTOP AS		PENGUARD	JOTAGUARD 85
19.	KCC PRODUCTS (KOREA)			KOPOX TOPCOAT HB ET 5740	EH 173

LIST OF RECOMMENDED MANUFACTURER'S PRODUCTS

S. NO.	MANUFACTURER'S NAME	F-8 EPOXY MASTIC COATING SURFACE TOLERANT	F-11 HEAT RESISTANCE SYNTHETIC MEDIUM ALUMINUM PAINT	F-12 HEAT RESISTANCE SILICON AL. PAINT
1.	ASIAN PAINTS (I) LTD.	APCODOR CF 640	ASIAN HR ALUMINUM PAINT (PC 300)	HR SILICON ALUMINUM PAINT (PC 189)
2.	BARGER PAINT LTD.	PROTECTOMASTIC FERRO	LOT HR ALUMINUM PANT	BARGER HEAT RISISTANT SILICON ALUMINUM PAINT
3.	AMERON/ GODDLASS NEROLAC PAINTS LTD.	AMERLOCK 400		AMERCOAT 878
4.	JENSON & NICHOSON PAINTS LTD. AND CHOKUGU JENSON NICHOLSON	- FERRO	TECT SYNTHETIC RUBBER H/R ALUMINUM PAINT 4000	FERRLOTECT SILICON HEAT RESISTANCE 1000
5.	SHALIMAR PAINTS LTD.	EPIPLUS 56	HEAT RESISTING LUSTROL ALUMINUM	LUSTOTHERM HIGH TEMP ALUMINUM PAINT
6.	SIGMA COATING	SIGMA ETPC ALUMINUM	HIGH TEMPERATURE RESISTANT EPOXY SUSTEM UPTO 200° C 4062	AROSTA FINISH HR
7.	CDC CARBOLINE LTD.	CARBOMASTIC-15	CARBOLINE 1248	CARBOLINE 4674
8.	PRIMER PRODUCTS LTD.	HB EPOXY MATIC 150B/ 150A		
9.	CORAMANDEL PAINTS CHEMICALS	- S	ILVOTOL HR ALUMINUM PAINT	CPC SILICONE HR ALUMINUM PAINT
10.	ANUPAM ENTERPRISES	ANUMASTIC-102	-	ANUPAM HEAT GUARD

LIST OF RECOMMENDED MANUFACTURER'S PRODUCTS

S. NO.	MANUFACTURER'S NAME	F8	F11	F12
11.	GRAND POLYCOATS	GP PRIME GUARD 235	-	
12.	BOMBAY PAINTS LTD./ HEMPEL MARINE PAINTS	HEMPADUR 1708	KANGAROO HHR ALUMINUM 4950	HEMPADUR HIGH BUILD 5520
13.	VANAPRABHA ESTERS & GLYCERIDES,	VEGEPOX MASTIC 2255	VEG HR AL PAINT TO IS211339	VEG HHR AL PAINT TO 600°C
14.	SUNIL PAINTS AND VARNISHED PVT. LTD.	LPOXY HIGHBUILD P.S.901	- -	
15.	COURT AULDS COATING LTD.	INTERPLUX -		INTERTHERM 50
16.	MARK-CHEM INCOPORATED, (FOR PHOSPHATE PAINTS ONLY)			
17.	VCM POLYURETHANE PAINTS (FOR POLY EURETHANE PAINTS ONLY)	-		
18.	JOTUN PAINTS	JOTUMATIC 87		SOLVELITT HEAT RESISTANT SILICON PAINT
19.	KCC PRODUCTS (KOREA)	EH 4158H		QT 606

Rev. : 0
Edition : 1

SPECIFICATION
FOR
PIPELINE MARKERS

SPECIFICATION NO.: MEC/S/05/21/10

(OIL & GAS SBU)
MECON LIMITED
DELHI 110 092

CONTENTS

SL.NO.	DESCRIPTION
1.0	SCOPE
2.0	REFERENCE CODES AND DRAWINGS
3.0	GENERAL
4.0	AERIAL MARKERS
5.0	KILOMETRE MARKERS
6.0	PIPELINE WARNING SIGN
7.0	ROW BOUNDARY MARKERS
8.0	DIRECTION MARKERS
9.0	NAVIGABLE WATERWAY PIPELINE CROSSING WARNING SIGN
RE	**FERENCE DRAWINGS**
ME	CON STANDARD DRAWINGS

MEC/TYP/05/21/10/001 : TYPICAL ROW BOUNDARY MARKER
MEC/TYP/05/21/10/002 : K.M. POST
MEC/TYP/05/21/10/003 : PIPELINE WARNING SIGN
MEC/TYP/05/21/10/004 : NAVIGABLE WATERWAY PIPELINE CROSSING WARNING SIGN
MEC/TYP/05/21/10/005 : AERIAL MARKER
MEC/TYP/05/21/10/006 : DIRECTION MARKER

PREPARED BY:	CHECKED BY:	APPROVED BY:	ISSUE DATE :
(Shalini Singh)	(Sunil Kumar)	(A.K. Johri)	Jan. 2009

1.0 **SCOPE**

1.1 This specification covers the minimum requirements for supply, fabrication and erection of pipeline markers to be installed by CONTRACTOR at various locations along the route of a cross-country pipeline.

1.2 This specification shall be read in conjunction with the conditions of all specifications and documents included in the CONTRACT between COMPANY and CONTRACTOR.

2.0 **REFERENCE CODES**

Reference has been made in this specification to the latest revision of the following code :

API RP 1109 : Recommended practice for marking liquid petroleum pipeline facilities.

3.0 **GENERAL**

3.1 CONTRACTOR shall supply, fabricate and install the pipeline markers along the pipeline route. The locations of markers as indicated in the approved drawings shall be treated for guidance purposes only and the exact location of the markers shall be based on AS BUILT drainage and as directed by COMPANY.

3.2 The pipeline markers shall be fabricated, painted (Painting shall be in accordance with the MECON Standard Specification for Shop & Field Painting) and installed in accordance with the MECON standard drawings included herein. Before start of fabrication of the markers, CONTRACTOR shall prepare and submit for COMPANY's approval the detailed scheme for the marker plates as applicable for the project.

3.3 The pipeline markers shall be installed, as far as possible, at locations such that to cause no hindrance to the regular use of the land or to the traffic.

4.0 **AERIAL MARKERS**

Aerial markers shall in general be installed along the pipeline at every five (5) kilometres intervals and at places specified by COMPANY. Refer MECON Standard Drawing No. MEC/TP/05/21/10/005 for details.

5.0 **KILOMETRE MARKERS**

Kilometre markers shall in general be installed along the pipeline between the aerial markers at every one (1) kilometre interval. Markers shall indicate cumulative distance in kilometres from the reference station, as directed by COMPANY. A kilometre marker is not required if the relative length between its location and any pipeline warning sign is less than 200 metres. Refer MECON Standard Drawing No. MEC/TP/05/21/10/002 for details.

6.0 PIPELINE WARNING SIGN

Pipeline Warning Sign shall in general be installed at

National and State Highway Crossings	(2 Nos.)
Other Road Crossings	(1 No.)
Railway Crossings	(2 Nos.)
Minor Water Crossings (less than 15m width)	(1 No.)
Minor Water Crossings (above 15m width)	(2 Nos.)
Major Water Crossings	(2 Nos.)
Valve Station	(1 No.)

And at any other location as shown in the approved drawings and as dire cted by the COMPAN .

Pipeline Warning Sign shall identify the ex istence of the pipeline and display the name of the COMPAN , with an emergency telephone number, as shown in MECON Standard Drawing No. MEC/T P/05/21/10/003 for details.

7.0 ROW BOUNDARY MARKERS

Right-of-Way boundary markers shall be fabricated and installed as per the drawings at every 250 metres interval along the entire pi peline route. These shall be installed on either side of the pipeline alignment to define the ROW boundary limits. These shall also be installed at pipeline turning points to maintain the continuity of the ROW limits. Refer MECON Standard Drawing No. MEC/T P/05/21/10/001 for details.

8.0 DIRECTION MARKERS

Direction markers as shown in ME CON Standard Drawing No. ME C/T P/05/21/10/006 shall be installed to id entify the significant turning points of the pipeline during aerial traverse. One direction marker shall be insta lled at each turning point, in addition, two more direction markers shall be installed along the pipeline alignment, one on either side of the turning point at 200m from the turning point.

9.0 SPECIAL MARKERS

As directed by Company, Special Marker shall be installed at Location where the following changes takes place :

- Change in pipeline diameter and wall thickness.
- Change in type of pipe.
- Change in class locations for pipeline conveying gas.

The above data may be provided on othe r types of marker (ex cept RoU boundary marker), if the relative distance between the two does not exceed 100 m.

10.0 NAVIGABLE WATERWAY PIPELINE CROSSING WARNING SIGN

The Navigable Waterway Pipeline Crossing Warning Sign shall be fabricated in accordance with MECON Standard Drawing No. MEC/T P/05/21/10/004. Such Warning Sign shall be installed one on each bank of navigable water courses at the pipeline crossing location, in lieu of the Pipeline Warn ing Sign described in clause 6.0 of this specification.

Rev. : 0
Edition : 1

SPECIFICATION
FOR
FLUSHING AND TESTING OF
PIPING SYSTEMS

SPECIFICATION NO.: MEC/S/05/21/11

(OIL & GAS SBU)
MECON LIMITED
DELHI 110 092

CONTENTS

SL. NO.	DESCRIPTION
1.0	SCOPE
2.0	REFERENCES
3.0	INSPECTION
4.0	FLUSHING
5.0	TESTING
5.1	EXTENT OF TESTING
5.2	GENERAL REQUIREMENT/TEST PREPARATION FOR TESTING
5.3	TESTING MEDIA, TEST PRESSURE AND TEST PRESSURE GAUGES.
5.4	TESTING PROCEDURE
5.5	COMPLETION OF TESTING
5.6	TEST RECORDS

1.0 SCOPE

This specification covers the general requirements for Inspection, flushing and testing of piping sy stems. How ever t esting of st eam lines f alling under I BR shall also be governed by Indian Boiler Regulations.

Flushing and t esting of all piping sy stem shall be witnessed by the Consultant Representative / Engineer-in- Charge.

2.0 REFERENCE

ASME B31.3-2004 : Process Piping

IBR : Indian Boiler Regulations

3.0 INSPECTION

During various stage and after completion fabrication and er ection, the piping system shall be inspect ed by the Consultant Representative / Engineer- in - Charge to ensure that :

- Proper piping material has been used.
- Piping has been erected as per drawings and the instruction of the engineer- in charge.
- All supports have been installed correctly.
- Test preparations mentioned in this specification have been carried out.

4.0 FLUSHING

Flushing of all lines shall be done before pressure testing.

Flushing shall be done by 'fresh potable water' or 'dry compressed air, wherever water flushing is not desirable' to clean the pipe of all dirt, debris or loose foreign materials.

Required pressure of water, flushing shall meet the fire hydrant pressure or utility water pressure. For air flushing the line, system will be pressurised by compressed air at the required pressure which shall be 50 psi maximum. The pressure shall then be released by quick opening of a valve, already in the line for this purpose. This procedure shall be repeated as many times as required till the inside of the pipe is fully cleaned.

In line inst ruments lik e cont rol v alves, or ifice plat es, r otameters, safety valves and other instruments like thermowells which m ay int erfere w ith f lushing shall not be included i m the flushing circuit.

From all permanent strainers the screens/meshes shall be removed before flushing. Screens/meshes shall be re- installed after flushing but before testing.

During flushing temporary strainers shall be retained. These shall be removed, cleaned and reinstalled after flushing, but, before testing.

In case an equipment such as column, vessel, exchanger etc. forms part of a piping circuit during flushing, this shall be done with the approval of Engineer- in - Charge. However equipment thus included in the circuit, shall be completely cleaned and dried with comprss4ed air, after flushing is completed.

During flushing discharged water/air shall be drained at the place directed the Engineer- in - Charge. If necessary, proper temporary drainage shall be provided by the contractor.

Care shall be taken during flushing so as not to damage/spoil work of other agencies. Precautions shall also be taken to prevent entry of water/foreign matter into equipment, electric motors, instruments, electrical installations etc. in the vicinity of lines being flushed.

The contractor shall carry out all the activities required before, during and after the flushing operation, arising because of flushing requirements, such as but not limited to the following.

Dropping of valves, specials, distance pieces, online instruments and any other piping part before flushing. The flanges to disengaged for this purpose shall be envisaged by the contractor and approved by the Engineer-in-Charge. These flanges shall be provided with temporary gaskets at the time of flushing.

After flushing is completed and approved, the valve, distance pieces, piping specials etc. shall be re-installed by the contractor with permanent gaskets. However, flanges of equipment nozzles and other places where isolation is required during testing, only temporary gaskets shall be provided.

Records in triplicate shall be prepared and submitted by the Contractor for each piping system for the flushing done in the proforma provided / approved by EIC.

5.0 TESTING

Pressure testing, in general shall be as per clause 345 of ASME B31. 3, unless otherwise specified, herein. Lines carrying highly hazardous / poisonous fluids must have a sensitive leak test. For IBR lines, 'IBR Regulations' shall also be followed.

5.1 Extent of testing

With the exclusion of instrumentation. piping system fabricated or assembled in the field shall be tested irrespective of whether or not they have been pressure tested prior to site welding of fabrication.

To facilitate the testing of piping systems, vessels and other equipments may be included in the system with the prior approval of Engineer-in-charge, if the test pressure specified is equal to or less than that for the vessels and other equipments.

Pumps, compressors and other votary equipments shall not be subjected to field test pressures.

Lines which are directly open to atmosphere such as vents, drains, safety valves, discharge need not be tested, but all joints shall be visually inspected wherever necessary such lines shall be tested by continuous flow of fluid to eliminate the possibility of blockage. However, such lines if provided with block valve shall be pressure tested upto the first block valve.

Seats of all vales shall not be subjected to a pressure in excess of the maximum cold welding pressure of the valve. Test pressure applied to vales shall not be grater than the manufacturer is recommendation nor less than that required by the applicable code. Where desirable set pressure is less than test pressure, test shall be made through an open valve.

Instruments in the system to be tested, shall be excluded from the test by isolation or removal, unless approved otherwise by the Engineer-in-charge. Restrictions which interfere with filling, venting and drawing such as orifice plates etc. shall not be installed unless testing is complete.

Control valves shall not be included in the test system. Where by-passes are provided test shall be performed through the by-pass end/or necessary spool shall be used in place of the control valve.

Pressure gauges which are part of the finished system, but cannot withstand test pressure shall not be installed until the system has been tested. Where piping systems to be tested are directly connected at the battery limits to piping for which the responsibility tests with other agencies, the piping to be tested shall be isolated from such piping by physical disconnection such as valves or blinds.

5.2 General Requirement/Test preparation for Testing

Test shall be carried out with permanent gaskets installed unless specified otherwise or instructed by the Engineer-in- charge.

No pressure test shall be carried out against close valve unless approved by the Engineer-in-charge.

The Engineer-in-charge shall be notified in advance by the contractor, of the testing sequence and programme, to enable him to be present for witnessing the test. The contractor shall be fully responsible for making arrangements with the local boiler inspector to witness the tests for steam lines falling under IBR. IBR certificates for these tests shall be obtained in the relevant IBR forms and furnished to the Engineer-in-charge. Before testing, all piping shall be cleaned by flushing to make it free from dist loose scale, debris and other loose foreign materials.

All piping systems to be hydrostatically tested shall be vented at the high points and the systems purged of air before the test pressure is applied.

Wherever in the line any void is existing due to any reasons, for absence of control valve, safety valve, check valves etc. it shall be filled with temporary spools.

All joints welded, screwed or flanged shall be left exposed for examination during the test. Before pressuring the lines, each weld joint shall be cleaned by wire brush to free it from rest and any other foreign matter.

Where a system is to be isolated of a pair of companion flanges, a blank shall be inserted between the companion flanges. Minimum thickness of the blank shall be designed in accordance with applicable design code.

Open ends of piping system where blanks cannot be used, such as pumps, compressors, turbines or wherever equipment or pipe spool have been received or disconnected prior to hydrostatic testing, shall be blinded – off by using standard blind flanges of same rating as the piping system being tested.

Pressure gauges used in testing shall be installed as close as possible to the lowest point in the piping system to be tested, to avoid overstressing of any of the lower portion of the system. For longer lines and vertical lines, two or more pressure gauges shall be installed at locations selected by the Engineer-in-charge. For lines containing check valves any of the following alternatives shall be adopted for pressure testing. Wherever possible pressurise up-stream side of valve.

Replace the valve by a temporary spool and re-install the valve after testing.

Provide blind on valve flanges and test the upstream and downstream of the line separately and remove the blind after testing. All these flanges, temporary gaskets shall be provided during testing and shall be replaced by permanent gaskets subsequently. For check valves in lines 1-1/2" and below, flapper or seat shall be

removed during testing (if possible). After completion of testing the flopper/ seat shall be refitted.

Gas lines when hydrostatically tested shall be provided with additional temporary supports during testing as directed by Engineer-in-charge.

Piping which is spring or counter – weight supported shall be temporarily supported, where the weight of the fluid would overload the support. Retaining pins for spring supports shall be removed only after testing is completed and test fluid is completely drained.

When testing any piping system, air or steam of approximately 2 kg/cm^2 (g) may be used as preliminary test to detect missing gaskets etc. as this avoids the necessity of purging the gas to make repairs. However, this method may not be used for this purpose, if the steam temperature is more than the design temp. of the line.

For jacketed pipes testing of core pipes shall be done on individual pieces where the pipe is continuously packed, before it is jacketed. The outer jacket shall be tested separately as a system for piping with discontinuous jacketing, the core pipe and the jacket shall be tested as separate system.

5.3 Testing Modes, Test pressure and Test Pressure Gauges

5.3.1 Testing Modes

In general all pressure test shall be hydrostatic using iron free water, which is clean and free of silt. Maximum clorine content in water for hydrostatic testing for MS piping shall be 15-20 ppm. Air shall be used for testing only if water would cause corrosion of the system or overloading of supports etc. in special cases as directed by Engineer-in-charge.

If operating fluid in the line is much lighter than testing fluid, the additional weight of testing fluid may render piping supports (as designed) inadequate. This will call for additional temporary supports. The typical examples are flare and vapor lines. It is preferable that hydrostatic testing is avoided in such systems and instead pneumatic testing may be specified.

Where air/water tests are undesirable substitute fluid such as gas, oil, methanol etc. shall be used as the testing medium, with due consideration to the hazards involved. These test fluids shall be specified in the line list given to the contractor.

5.3.2 Test Pressure

The hydrostatic/pneumatic test pressure shall be as indicated in the line list or as per the instruction of Engineer-in-charge.

The selection of the piping system for one individual test shall be based on the following :-

Test pressure required as per line list.

Maximum allowable pressure for the material of construction of piping depending upon the above requirements and based on construction progress, maximum length of piping shall be included in each test.

5.3.3 Test Pressure Gauge

All gauge used for field testing shall have suitable range so that the test pressure of the various system falls in 35% to 65% of gauge scale range. Pressure gage shall be minimum of 150 mm. Size of Bourdon shall not be less than 75% of nominal diameter of dial range. Gauge shall be of a good quality and in first class working condition.

Prior to the start of any test or periodically during the field test programmes, all test gauges shall be calibrated using a standard dead weight gauge tester or other suitable approved testing apparatus. Any gauge having an incorrect zero reading or error of more than ± 2% of full scale range shall be discarded. The Engineer-in-charge shall check the accuracy of master pressure gauge used for calibration.

5.4 Testing Pressure

5.4.1 Hydrostatic Test

All vents and other connections used as vents shall be kept open while filling the line with test fluid for complete removal of air. For pressurising and depressurising the system, temporary isolating valves shall be provided if valves, vents, drains do not exist in the system.

Pressure shall be applied only after the system/line is ready and approved by the Engineer-in-charge.

Pressure shall be applied by means of a suitable test pump or other pressure source which shall be isolated from the system as the desired test pressure is reached and stabilised in the system.

A pressure gauge shall be provided at the pump discharge for guiding the system to the required pressure.

The pump shall be attended constantly during the test by an authorised person. The pump shall be isolated from the system wherever the pump is to be left unattended.

Test pressure shall be maintained for a sufficient length of time to permit through inspection of all joints for leakage or signs of failure. Any joint found leaking during a pressure test, shall be re-tested to the specified pressure after repair. Test period shall be maintained for a minimum of four hours.

The pump and the piping system to be tested are to be provided with separate pressure indicating test gauges. There gauges are to be checked by the standard test gauge before each pressure test.

Care shall be taken to avoid increase in the pressure due to atmospheric variation during the test.

5.4.2 Air Test

When testing with air, pressure shall be supplied by means of a compressor. The compressor shall be portable type with a receiver after cooler & oil separator.

Piping to be tested by air shall have joints covered with a soap and water solution so that the joints can be examined for leaks.

All other activities shall be same as per hydrotesting procedure (specified above).

5.5 Completion of Testing

After the hydrostatic test has been completed, pressure shall be released in a manner and at a rate so as not to endanger personnel or damage equipments.

All vents and drains shall be opened before the system is to be drained and shall remain open till all draining is complete, so as to prevent formation of vacuum in the system. After draining lines/systems shall be dried by air.

After testing is completed the test blinds shall be removed and equipment/piping isolated during testing shall be connected using the specified gaskets, bolts and nuts. These connections shall be checked for tightness in subsequent pneumatic tests to be carried out by the contractor for complete loop/ circuit including equipments (except rotary equipments).

Pressure tests shall be considered complete only after approved by the Engineer-in-charge. Defects, if any, noticed during testing shall be rectified immediately and retesting of the system/line shall be done by the contractor at his cost.

5.6 Test Records

Records in triplicate shall be prepared and submitted by the contractor for each piping system, for the pressure test done in the proforma provided / approved by the Engineer-in-charge.

Rev. : 0
Edition : 1

SPECIFICATION
FOR
GASKETS, BOLTS & NUTS

SPECIFICATION NO.: MEC/S/05/21/19

(OIL & GAS SBU)
MECON LIMITED
DELHI 110 092

CONTENTS

SL.NO.	DESCRIPTION
1.0	GAS ETS
2.0	NUTS AND BOLTS

PREPARED BY:	CHECKED BY:	APPROVED BY:	ISSUE DATE :
(Shalini Singh)	(Sunil Kumar)	(A.K. Johri)	Jan. 2009

TECHNICAL NOTES FOR GASKETS

1.0 All gaskets shall conform to the codes/standards and specifications given in the requisition. Vendor shall strictly comply with MR / PR stipulations and no deviations shall be permitted.

2.0 Process of manufac ture, dimensions and t olerances not specified in requisition shall be in accordance with the requirements of the manufacturer s standards.

3.0 Test reports shall be supplied for all mandatory tests for gaskets as per the standards specified in the requisition.

4.0 Chemical composition and hardness of RT gaskets shall also be fu rnished in the form of test reports on samples.

5.0 For Spiral wound material following shall be furnished:

a. Manufacturer s test certificate for filler material and sp iral material as per the relevant material specifications.

b. Manufacturer s test certificate for raw materials and tests for compressibility / seal-ability & recovery as per the relevant material specifications.

6.0 Full face gaskets shall have bolt holes punched out.

7.0 Filler material for spiral wound gaskets shall not have any colour or dye.

8.0 All spiral wound gaskets shall be supplied with Outer ring. Material of the outer ring shall be CS unless other wise specified in the MR.

9.0 For spiral wound gaskets, materi al of Inner Compression ring sh all be same as Spiral Strip material. In addition to the requirements as per code and as specified in the MR, inner rings shall be provided for the following:

a. Si es 26 and above.

b. Class 900 and above.

10.0 Hardness of metallic RT gaskets shall not exceed the values specified below unless otherwise specified in MR :

Ring Gasket Material	Maximum Hardness (BHN)
Soft Iron	90
Carbon steel	120
5 Cr. Mo	130
Type 304, 316, 321, 347	140
Type 304L, 316L	120

11.0 Face finish of metallic RT gaskets shall be 32 to 63 AARH.

12.0 Gaskets of different types and si es shall be placed in separate shipping containers and each container clearly marked with the si e, rating, material specification and item code.

13.0 All items shall be inspected and approved by MECON Inspector or any other agency authori ed by MECON.

14.0 Any additional requirements specified in the requisition, shall be fully complied with.

15.0 Non-metallic ring gaskets as per ASME B16.21 shall match flanges to ASME B16.5 upto 24 (except 22 si e) and to ASME B16.47B above 24 unless specified otherwise. For 22 si e, the matching flange standard shall be MSS-SP44 unless specified otherwise.

16.0 Spiral wound gasket as per ASME B16.20 shall match flanges to ASME B16.5 upto 24 (except 22 si e) and to ASME B16.47B above 24 unless specifically mentioned otherwise. For 22 si e, the matching flange standard shall be MSS-SP44 unless specified otherwise.

17.0 The following abbreviations have been used in the Material Requisition for Spiral Wound Gaskets :

(I)	:	Inner Ring
(O)	:	Outer Ring
CAF	:	Compressed Asbestos Fibre
GRAFIL	:	Grafoil Filler

TECHNICAL NOTES FOR BOLTS & NUTS

1.0 The process of manufacture, heat treatment, chemical & mechanical requirements and marking for all stud bolts, m/c bolts, jack screws & nuts shall be in accordance with the codes / standards and specification given in the requisition. The applicable identification symbol in accordance with the material specification shall be stamped on each bolt and nut. Vendor shall strictly comply with MR / PR stipulations and no deviations shall be permitted.

2.0 Test reports shall be supplied for all mandatory tests as per the relevant material specifications.

3.0 Material test certificate shall also be furnished. (Heat Analysis, Product Analysis and Mechanical Requirement)

4.0 Stress Rupture Test as detailed in ASTM A453 shall be carried out for all ASTM A453 bolting material irrespective of the temperature.

5.0 All bolting shall be as per ANSI B 18.2.1 for studs. M/c bolts and jackscrews and ANSI BI8.2.2 for nuts.

6.0 Threads shall be unified (UNC for 1 dia and BUN for 1 dia) as per ANSI B.1.1 with class 2A fit for studs, M/c bolts and jackscrews and class 2B fit for nuts.

7.0 Stud bolts shall be threaded full length with two heavy hexagonal nuts. Length tolerance shall be in accordance with the requirement as per ANSI B 16.5.

8.0 The nuts shall be double chamfered, semi-finished, heavy hexagonal type and shall be made by the hot forged process and stamped as per respective material specification.

9.0 Heads of jackscrews and m/c bolts shall be heavy hexagonal type. ackscrew end shall be rounded.

10.0 Each size of studs & m/c bolts with nuts and jackscrews shall be supplied in separate containers marked with size and material specifications. CRO shall be marked additionally in case CRO is specified in the requisition.

11.0 All items shall be inspected and approved (stagewise) by MECON inspector or any other agency authorized by MECON.

12.0 The heat treatment for stud bolts & nuts shall be as per code unless mentioned otherwise.

13.0 All austenitic stainless steel bolts, nuts, screws shall be supplied in solution annealed condition unless specified otherwise in the material specification.

14.0 Any additional requirements specified in the requisition shall be fully complied with.

15.0 Stud bolts, nuts & jackscrews shall be impact tested wherever specified in t he material specification and also where t he material specification is indicated as CR O . For S.S. nuts and bolts minimum impact energy absorption shall be 27 oules and test temperature shall be -196 C unless mentioned otherwise. For other materials impact energy and test shall be as per respective code.

16.0 Bolts / nuts of material of construction B7M / 2HM shall be 100 Hardness tested as per supplementary requirement S3 of ASTM A 193.

17.0 When specified as galvani ed, the studs, m/c bolts and nuts shall be hot dip inc coated in accordance with requirements of class C of ASTM A 153 . As an alternative, electro-galvani ing as per IS 1573, Service Grade Number 2 is also acceptable.

18.0 All Stud Bolts of Bolt diameter si e 1 and above shall be provided with three nuts irrespective of whatever has been specified elsewhere in the MR.

PIPING MATERIAL SPECIFICATION

DOC.NO. MEC/05/CG/M/000/1092, R0

(PROCESS & PIPELINE DESIGN SECTION)

MECON LIMITED

DELHI - 110 092

TABLE OF CONTENTS

1.0 SCOPE
2.0 CODES AND STANDARDS
3.0 MATERIAL SPECIFICATION
4.0 CLASS DESIGNATION CODE
5.0 PIPELINE
6.0 PIPING
7.0 FITTINGS
8.0 BENDS
9.0 FLANGES
10.0 GASKETS
11.0 BOLTING
12.0 THREAD SEALANT
13.0 VALVES
14.0 QUICK OPENING END CLOSURE
15.0 HYDROTESTING VENTS AND DRAINS
16.0 PIPELINE SPECIALITY ITEMS

TABLE-1 PIPE WALL THICKNESS DETAILS FOR MAINLINE
TABLE-2 INDEX OF PIPING MATERIAL SPECIFICATIONS
APPENDICES-I TO IV PIPING MATERIAL SPECIFICATIONS AS PER TABLE - 2

PREPARED BY:	CHECKED BY:	APPROVED BY:	DATE ISSUED:
Kaushal Kumar (APE, Me hani al)	G.Raju (Sr. DE)	A.K. JHA (DGM P&C)	07.12.2019

1.0 SCOPE

This specification covers the requirements of various piping materials used in piping/ pipeline system handling Natural Gas / Regasified Liquid Natural Gas (RLNG) and associated utilities in the pipeline network.

2.0 CODES AND STANDARDS

2.1 Pipeline network and terminal/station facilities envisaged as a part of this project shall be designed and Engineered primarily in accordance with the provision of ASME B 31.8 – Gas Transmission & Distribution Piping System - Latest edition and OISD Standard 226-Natural Gas Transmission Pipeline and City Gas Distribution Networks.

2.2 All codes standards and specifications referred herein shall be the latest edition of such documents.

2.3 For sake of brevity, the initials of the society to which the codes are referred are omitted in the specification, for example, B16.5 is a code referring to ANSI/ ASME, A 105 is a code referring to ASTM.

2.4 In addition, MECON specifications for various piping and pipeline materials shall also be applicable.

3.0 MATERIAL SPECIFICATION

Piping material specifications are classified for the general purpose of selection of material for the class of services. The maximum design pressure and design temperature together with the fluid in line governs the selection of material specifications. Deviation of materials from class specifications may occur due to specific design condition. These deviations are permissible if they are equal or better than the individual class requirements.

4.0 CLASS DESIGNATION CODE

The piping class designation consist of three digits numbering system made up of letter, number and letter e. g. A1A, B1A, D1A, etc as follows:

First letter indicates ANSI class rating e. g.
A-Class 150
B-Class 300
D-Class 600

The middle number indicates differences in the specification within the same rating and material.

The last letter indicates type of material e. g.

A-Carbon Steel

5.0 **PIPELINE**

The material for linepipe shall be as per the requirements of specification as indicated in Table-1.

6.0 **PIPING**

6.1 Carbon steel pipe shall be made by open hearth, electric furnace or basic oxygen process only. The steel used shall be fully killed and made with fine grain structure. The grade and wall thickness of various sizes of pipes shall be as per piping material specification for the applicable class.

6.2 Pipe dimension shall be in accordance with ANSI B 36.10 for carbon steel pipes and ANSI B 36.19 for stainless steel pipes.

6.3 All pipe threads shall conform to American Standard taper as per ANSI B 1.20.1 NPT, unless otherwise specified.

6.4 For butt weld end, bevel shall be in accordance to ANSI B 16.25/ API 5L as applicable.

7.0 **FITTINGS**

7.1 Fully killed carbon steel shall be used in the manufacture of fittings.

7.2 Threaded joints, if used shall conform to American Standard taper as per ANSI 1.20.1 NPT.

7.3 Dimension of socket weld/ screwed fittings shall conform to ASME B 16.11

7.4 Bore of socket welded fittings shall suit O. D. of pipe and its thickness.

7.5 Dimensions of butt welded carbon steel fittings shall be as per ASME B 16.9 / MSS-SP-75, as applicable.

7.6 Butt welding ends shall conform to ANSI B 16.25/ API 5L. In case of difference in thickness of matching ends, requirements of ASME B 31.8 shall apply.

7.7 Integrally reinforced forged branch fittings such as sockolet, threadolet, weldolet, nippolet etc. shall be as per MSS-SP-97. Fittings not covered in ASME B 16.9 and MSS-SP-97 shall conform to manufacturer's standard.

7.8 Fittings thickness tolerances shall match pipe thickness tolerance.

8.0 **BENDS**

8.1 Unless otherwise specified for terminal piping, the elbow of radius R=1.5 D shall only be used.

8.2 The radius of cold field bends shall not be less than 30 times the nominal diameter for pipes upto nominal diameter of 16" and shall not be less than 40 times the nominal diameter for pipes of nominal diameter of 18" and above. Limited use of long radius bends (R = 6D) / (R-=3D) may be permitted for reason of space constraints.

9.0 **FLANGES**

9.1 Flange rating shall be same as ANSI B 16.5/MSS-SP-44/ B 16.47 Series A as specified.

9.2 Dimensions of flanges shall be in accordance with ANSI B 16.5/ B 16.47 Series A, as applicable.

9.3 Neck of Weld Neck (WN) flanges to suit pipe bore and thickness.

9.4 Bore of Socket Welded (SW) flanges shall suit pipe O.D. and its thickness.

9.5 Threads for screwed flanges if used shall conform to American Standard taper as per ANSI B 1.20.1 NPT.

9.6 Sizes for blind flanges shall be indicated by nominal pipe sizes.

9.7 Carbon steel flanges faces shall have smooth finish as indicated in the material specification. Flanges faces shall have smooth finish to 125-250 micro inches AARH as per MSS-SP-6.

9.8 Butt welding ends of WN flanges shall conform to ANSI B 16.25.

9.9 Spectacle blind/ spacer & blinds shall be in accordance with ASME B 16.48 / Manufacturer's Standard. Spectacle blind shall be used for sizes up to 8" NB and spacer & blind for 10" & above shall be used.

9.10 Two jack screws 180° apart shall be provided for all spectacle blind assemblies. The jack screws shall be as per MECON's standard.

10.0 GASKETS

10.1 Spiral wound metallic gaskets shall conform to B 16.20 and API 601 shall be provided with graphite filler. All spiral wound gaskets shall be provided with stainless steel centering ring.

11.0 BOLTING

11.1 Nuts for stud bolts shall be American Standard Hexagonal Heavy series and double chamfered.

11.2 Dimension and tolerances for stud bolts and nuts shall be as per ANSI B 18.2.1 and 18.2.2 with full threading to ANSI B 1.1 Class 2A thread for bolts and Class 2B for nuts. Diameter and length of stud bolts shall be as per ANSI B 16.5/ ASME B 16.47 with full threading.

11.3 Threads for nuts shall be as per ANSI B 1.1, as follows:

Nuts for stud dia ¼" to 1"	:	UNC-2B
Nuts for stud bolts dia $1^{1/8}$" to 3 ¼"	:	8UN-2B

11.4 Threads for stud bolts shall be as per ANSI B 1.1, as follows.

Studs bolts dia ¼" to 1"	:	UNC-2A
Stud bolts dia $1^{1/8}$" to 3 ¼"	:	8UN-2A

11.5 Heads of jack screws shall be heavy hexagonal type. Jack screw end shall be rounded. Stud bolts shall be fully threaded with two hexagonal nuts.

12.0 THREAD SEALANT

12.1 Threaded joints shall be made with 1" wide PTFE Jointing tape.

13.0 VALVES

13.1 Valve ends shall be as per piping material specifications (Appendices).

13.2 Flange dimensions and face finish of flanged end valves shall confirm to clause 9.0 of this specification.

13.3 Butt welding ends of Butt Welded valves shall conform to ANSI B 16.25.

13.4 Face to face and end to end dimensions shall conform to applicable standards.

13.5 Buried valves on mainline /CGD Pipeline network shall be provided with stem extension/ without stem (as applicable), sealant, vent/drain & shall have butt welded ends.

13.6 Sectionalizing Valves (Block valves) installed on the main pipeline shall be Ball valves with fully welded body having butt welded ends and shall be full bore to allow smooth passage of cleaning pigs as well as intelligent pigs.

13.6 A Sectionalizing valves (Block valve) installed on the CGD pipeline network Shall be ball valve with fully welded body having Butt welded end and shall be preferable of full bore opening.

13.7 Unless specified otherwise. Valves shall confirm to the following standards:

<u>Screwed / Socket welded / Flanged end valves (1 ½" and below)</u>

Ball Valves	-	BS 5351(latest)
Plug Valves	-	BS 5353(latest)
Globe Valves	-	BS 5352(latest)
Gate Valves	-	API 602(latest)

<u>Flanged / Butt weld end Valves (2" and above)</u>

Ball Valves	-	API 6D
Plug Valves	-	API 6D
Check Valves	-	API 6D
Globe Valves	-	BS 1873

Gate Valves - API 6D

13.8 Manual Valve operators shall be as indicated below, unless specified otherwise in the P&ID.

a) **Gate and Globe Valves**

i) For ANSI class 150 & 300 - Hand Wheel operated for size ≤12"NB.
Gear operated for size ≥14" NB.

ii) For ANSI class 600 - Hand Wheel operated for size ≤10"NB.
Gear operated for size ≥12" NB.

b) **Ball and Plug Valves**

i) For ANSI class 150, 300, 600 – Wrench operated for size ≤4"NB.
Gear operated for size ≥6"NB.

b) **Actuated Valves**- Actuated valves shall be as per approved Data Sheet.

14.0 QUICK OPENING END CLOSURE

Quick opening end closure to be installed on scrapper traps shall be equipped with safety locking devices in compliance with section VIII, division 1, UG-35.2 of ASME Boiler and Pressure Vessel code.

15.0 HYDRO TESTING VENTS AND DRAINS

High point vents and low point drains required for the purpose of hydro testing shall be of size 3/4" and consist of sockolet, Plug/ Ball valve for vent, Globe / Ball Valve for drain, flange & blind flange.

16.0 PIPELINE SPECIALITY ITEMS

Pipeline Specialty items viz., Scrapper Traps, Flow Tee, Insulating Joints, LR bends, QOEC for Venting shall be as per respective data sheets, specifications and Project Specific drawing showing Mainline CGD Pipeline Network & Terminal / Station materials.

TABLE-1

PIPE WALL THICKNESS DETAIL FOR CGD PIPELINE NETWORK

Sl. No.	Pipe Material Description	Si e (NB)	Thicknes s(mm)	Length
1.	API 5L Gr. X-70, PSL-2	12”	6.4 to 9.7	As per SOR Quantity
2.	API 5L Gr. X-52 & 56 PSL-2	10”	6.4 to 9.7	As per SOR Quantity
3.	API 5L Gr. X-52, PSL-2	8”	6.4 to 8.7	As per SOR Quantity
4.	API 5L Gr. X-52, PSL-2	6”	6.4	As per SOR Quantity
5.	API 5L Gr. X-42,52 &56 PSL -2	4”	6.4	As per SOR Quantity

TABLE-2

INDEX OF PIPING MATERIAL SPECIFICATIONS

Class	Service	C.A. (mm)	Basic Material	Design Code	Enclosed as
A1A	Natural Gas/ RLNG	1.5	ASTM A 106 Gr. B /API 5L Gr. B	ANSI B31.8	Appendix-I
A4A	Natural Gas/ RLNG	1.5	ASTM A 333 Gr. 6	ANSI B31.8	Appendix-II
B1A	Natural Gas/ RLNG	1.5	ASTM A 106 Gr. B /API 5L Gr. B	ANSI B31.8	Appendix-III
B4A	Natural Gas/ RLNG	1.5	ASTM A 333 Gr. 6	ANSI B31.8	Appendix-IV

ANSI CLASS: 150 #	CORROSION ALLOWANCE: 1.5 MM	TEMP °C	−29	38.0	50	100	150	200
		PRESS. KG/CM^2g	19.98	19.98	19.57	18.05	16.11	14.07
SERVICE : NATURAL GAS		BASE MATERIAL: CARBON STEEL (MATERIAL GROUP 1.1)						

NOTES: –

1. ALL VENTS & DRAIN SHALL BE PROVIDED WITH PLUG VALVE UNLESS MENTIONED OTHERWISE IN P&IDs.
2. FITTINGS SHALL BE OF SEAMLESS CONSTRUCTION UP TO 16" AND SHALL BE OF WELDED CONSTRUCTION 18" AND ABOVE.
3. WALL THICKNESS FOR LINEPIPE USED IN VARIOUS SECTIONS SHALL BE AS PER TABLE–1 OF PMS.
4. BALL VALVE TO BE USED IN MAINLINE SHALL HAVE BUTT WELDED ENDS EXCEPT FOR THE VALVES USED FOR HOT TAPPING WHICH SHALL BE ONE SIDE BUTT WELDED AND OTHER SIDE FLANGED.
5. PROCUREMENT OF MATERIALS SHALL BE AS PER DETAILED RELEVANT SPECIFICATIONS.
6. DESIGN PRESSURE & TEMP. FOR PIPELINE AND RELATED FACILITIES ARE 19 Kg/Cm^2g & (−29° TO +65°C) RESPECTIVELY.
7. PRESSURE–TEMPERATURE RATING INDICATED ARE FOR FLANGES ONLY IN ACCORDANCE WITH ANSI B 16.5
8. FOR VALVES,STEELPIPE AND ASSOCIATED STEEL COMPONENTS OF 2" AND LARGER NOTCH TOUGHNESS PROPERTIES SHALL BE AS SPECIFIED IN RELEVANT SPECIFICATIONS/CODES, MECON'S STANDARD TECHNICAL SPECIFICATIONS AND DATA SHEETS ETC.
9. AT STATIONS, BRANCH CONNECTIONS SHALL BE AS PER BRANCH CONNECTION TABLE BELOW
10. ALL BUTT WELDS SHALL BE 100% RADIOGRAPHED.
11. 100% OF SOCKET WELD SHALL BE SUBJECTED TO MPI/DPT.
12. PRESSURE–TEMPERATURE RATING OF VALVE BODY SHALL BE AS PER API 6D.
13. PIPELINE DESIGN CODE – ASME B 31.8 & OISD 226.
14. FOR PIPELINE SPECIALITY ITEMS (SCRAPPER TRAP, BARRED TEE, IJ, LR BENDS ETC.) AND THEIR MATERIAL DESCRIPTIONS REFER DATA SHEET OF RESPECTIVE ITEMS.

STATION PIPING MATERIAL SPECIFICATION

ITEM	SIZE	DESCRIPTION
MAINTENANCE JOINTS	ALL	FLGD., BUT TO BE KEPT MINIMUM
PIPE JOINTS	1.5" & BELOW	SOCKET WELD
	2" & ABOVE	BUTT WELDED
DRAINS	ON LINES ≤ 1.5"	3/4", AS PER MEC/SD/05/21/15/03
	ON LINES ≥ 2"	3/4" OR AS PER P&ID, MEC/SD/05/21/15/01
VENTS	ON LINES ≤ 1.5"	3/4", AS PER MEC/SD/05/21/15/03
	ON LINES ≥ 2"	3/4" OR AS PER P&ID, MEC/SD/05/21/15/01
TEMP. CONN.	1.5"	FLGD. INSTL. AS PER MEC/SD/05/21/15/02
PRESS CONN.	3/4"	SCH. 160 NIPPLE WITH BALL VALVE TO SPEC. INSTALLATION AS PER MEC/SD/05/21/15/05

BRANCH CONNECTIONS

E	TEES BW
H	H. COUPLING
P	PIPE TO PIPE
R	REINFORCED
S	SOCKETLETS
T	TEES SW/
W	WELDOLETS
D	TEE WITH RED.

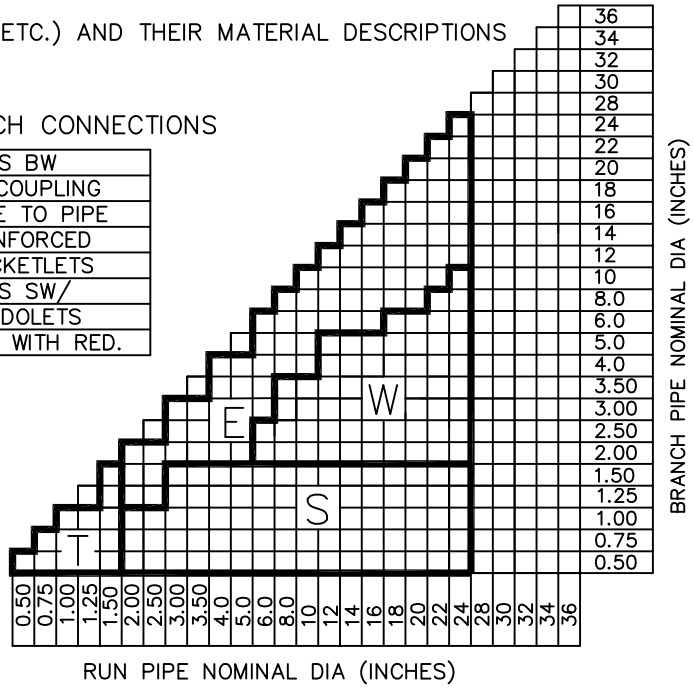

SECTION: OIL & GAS

NATURAL GAS PIPELINE PROJECT

PIPING MATERIAL SPECIFICATIONS 150# (A1A)

APPROVED SUNIL KUMAR | DRWN | DSGN K.P. | NAME | DATE | CHKD S.S. | DATE

REV NO | DATE | ZONE | DESCRIPTIONS | BY | APPRD

REVISIONS | REFERENCES | DRG. NO.

मेकॉन लिमिटेड

MECON LIMITED

SCALE : N.T.S.

APPENDIX–I (SH. 1 OF 2)

REV 0

PIPELINE/PIPING DESIGN CODE	ASME B 31.8/ OISD 226	DESIGN FACTOR – 0.5

ITEM	NOMINAL DIAMETER (INCHES)	0.50	0.75	1.00	1.50	2.00	3.00	4.00	6.00	8.00	10.0	12.0	14.0	16.0	18.0	20.0	22.0	24.0			
PIPE	WALL THICKNESS (MM/SCH)	S160	S160	XS	XS	XS	STD	STD	STD	S20	S20	S20	S10	S10	S10	7.1	7.9	8.7			
	MATERIAL	ASTM A106 GR.B				ASTM A106 GR.B (CHARPY)				API 5L GR.B PSL2											
	DIMENSION STD.	B36.10								API 5L											
	METHOD OF MANUFACTURE, ENDS	SEAMLESS PE				SEAMLESS BE							SAW, BE								
FLANGE	MATERIAL AND GRADE	ASTM A 105				ASTM A 105 (CHARPY)															
	TYPE, FLANGE FACING	SW. RF 125AARH				WN. THICKNESS TO MATCH PIPE THICKNESS, RF 125AARH															
	DIMENSION STD.	B16.5																			
BLIND FLANGE	MATERIAL AND GRADE	ASTM A 105				ASTM A 105 (CHARPY)															
	FLANGE FACING	RF 125AARH																			
	DIMENSION STD.	B16.5																			
BLANK	MATERIAL AND GRADE	ASTM A 105				ASTM A 105 (CHARPY)															
	FLANGE FACING	FF 125AARH																			
	DIMENSION STD.	B16.48																			
	TYPE	FIG.8 FLANGE									SPACER & BLIND										
BOLTING	STUD BOLTS (FULLY THREADED)	A 193 GR B7, B–18.2																			
	NUTS (HEAVY HEXAGONAL)	A 194 GR 2H, B–18.2																			
GASKET	TYPE, MATERIAL AND Dmn. STD.	SP. WND SS 316+GRAPHITE FILLED AS PER B 16.20/ANSI B 16.5																			
ELBOW–90 ELBOW–45	MATERIAL	ASTM A 105				ASTM A 234 GR.WPB (CHARPY)					ASTM A 234 GR.WPB–W (CHARPY)										
	END DETAIL	SW,6000#		SW,3000#		BW, 1.5D															
	DIMENSION STD.	B–16.11				B–16.9															
T–EQUAL T–RED	MATERIAL	ASTM A 105				ASTM A 234 GR.WPB (CHARPY)					ASTM A 234 GR.WPB–W (CHARPY)										
	END DETAIL	SW,6000#		SW,3000#		BW															
	DIMENSION STD.	B–16.11				B–16.9															
CAP	MATERIAL	ASTM A 105				ASTM A 234 GR.WPB (CHARPY)															
	END DETAIL	SCRF6000		SCRF3000		BW, THICKNESS TO MATCH PIPE THICKNESS															
	DIMENSION STD.	B–16.11				B–16.9															
FITTING	MATERIAL	ASTM A 105				ASTM A 234 GR.WPB (CHARPY)					ASTM A 234 GR.WPB–W (CHARPY)										
	END DETAIL	SW,6000#		SW,3000#		BW, THICKNESS TO MATCH PIPE THICKNESS															
	DIMENSION STD.	B–16.11				B–16.9															
	TYPE	COUPLING FULL,HALF LH.,RED.				RED. CON. RED. ECC.															
O'LET	MATERIAL	ASTM A 105				ASTM A 105 (CHARPY)															
	END DETAIL	SW,6000#		SW,3000#		BW															
	DIMENSION STD.	MSS–SP97				MSS–SP97															
	TYPE	SOCKOLET				WELDOLET															

SECTION: OIL & GAS

	NAME	DATE
DSGN	K.P	
DRWN		
CHKD	S.S.	
APPROVED	SUNIL KUMAR	

REV NO | DATE | ZONE | DESCRIPTIONS | BY | APPRD

REVISIONS | REFERENCES

NATURAL GAS PIPELINE PROJECT

PIPING MATERIAL SPECIFICATIONS 150# (A1A)

SCALE : N.T.S.

APPENDIX–I

(SH. 2 OF 2)

REV 0

DRG. NO.

मेकॉन लिमिटेड

MECON LIMITED

ANSI CLASS: 150#	CORROSION ALLOWANCE: 1.5MM	TEMP °C	−45	38	50	100	150	
		PRESS. KG/CM^2g	18.76	18.76	18.55	17.74	16.11	
SERVICE : RLNG		BASE MATERIAL: CARBON STEEL (MATERIAL GROUP 1.3)						

NOTES: –

1. ALL VENTS & DRAIN SHALL BE PROVIDED WITH PLUG VALVE UNLESS MENTIONED OTHERWISE IN P&IDs.
2. FITTINGS SHALL BE OF SEAMLESS CONSTRUCTION UP TO 16" AND SHALL BE OF WELDED CONSTRUCTION 18" AND ABOVE.
3. WALL THICKNESS FOR LINEPIPE USED IN VARIOUS SECTIONS SHALL BE AS PER TABLE–1 OF PMS.
4. BALL VALVE TO BE USED IN MAINLINE SHALL HAVE BUTT WELDED ENDS EXCEPT FOR THE VALVES USED FOR HOT TAPPING WHICH SHALL BE ONE SIDE BUTT WELDED AND OTHER SIDE FLANGED.
5. PROCUREMENT OF MATERIALS SHALL BE AS PER DETAILED RELEVANT SPECIFICATIONS.
6. PRESSURE–TEMPERATURE RATING INDICATED ARE FOR FLANGES ONLY IN ACCORDANCE WITH ANSI B 16.5
7. FOR VALVES,STEELPIPE AND ASSOCIATED STEEL COMPONENTS OF 2" AND LARGER NOTCH TOUGHNESS PROPERTIES SHALL BE AS SPECIFIED IN RELEVANT SPECIFICATIONS/CODES, MECON'S STANDARD TECHNICAL SPECIFICATIONS AND DATA SHEETS ETC.
8. AT STATIONS, BRANCH CONNECTIONS SHALL BE AS PER BRANCH CONNECTION TABLE BELOW
9. ALL BUTT WELDS SHALL BE 100% RADIOGRAPHED.
10. 100% OF SOCKET WELD SHALL BE SUBJECTED TO MPI/DPT.
11. PRESSURE–TEMPERATURE RATING OF VALVE BODY SHALL BE AS PER API 6D.
12. PIPELINE DESIGN CODE – ASME B 31.8 & OISD 226.
13. FOR PIPELINE SPECIALITY ITEMS (SCRAPPER TRAP, FLOW TEE, IJ, LR BENDS ETC.) AND THEIR MATERIAL DESCRIPTIONS, REFER DATA SHEET OF RESPECTIVE ITEMS.
14. DESIGN PRESSURE&TEMP. FOR PIPELINE AND RELATED FACILITIES ARE 19 KG/cm^2g &(−45° TO +65° C) RESPECTIVELY.

STATION PIPING MATERIAL SPECIFICATION

ITEM	SIZE	DESCRIPTION
MAINTENANCE JOINTS	ALL	FLGD., BUT TO BE KEPT MINIMUM
PIPE JOINTS	1.5" & BELOW	SOCKET WELD
	2" & ABOVE	BUTT WELDED
DRAINS	ON LINES ≤ 1.5"	3/4", AS PER MEC/SD/05/21/15/03
	ON LINES ≥ 2"	3/4" OR AS PER P&ID, MEC/SD/05/21/15/01
VENTS	ON LINES ≤ 1.5"	3/4", AS PER MEC/SD/05/21/15/03
	ON LINES ≥ 2"	3/4" OR AS PER P&ID, MEC/SD/05/21/15/01
TEMP. CONN.	1.5"	FLGD. INSTL. AS PER MEC/SD/05/21/15/02
PRESS CONN.	3/4"	NIPPLE WITH BALL VALVE TO SPEC. INSTALLATION AS PER MEC/SD/05/21/15/05

BRANCH CONNECTIONS

E	TEES BW
H	H. COUPLING
P	PIPE TO PIPE
R	REINFORCED
S	SOCKETLETS
T	TEES SW/
W	WELDOLETS
D	TEE WITH RED.

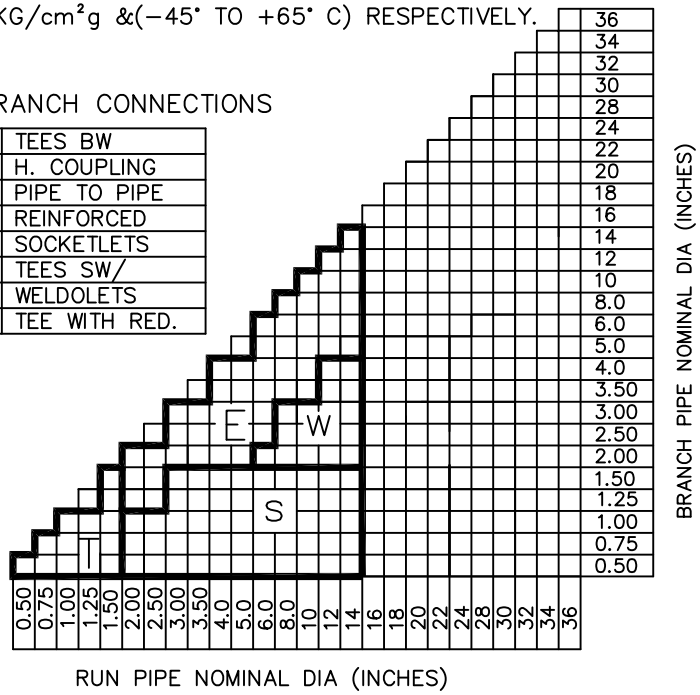

SECTION: OIL & GAS

NATURAL GAS PIPELINE PROJECT

PIPING MATERIAL SPECIFICATIONS 150# (A4A)

APPENDIX–II

SCALE : N.T.S.

(SH. 1 OF 2)

REV 0

मेकॉन लिमिटेड

MECON LIMITED

ISO 9001:2000 COMPANY

APPROVED	DRWN	DSGN	NAME	DATE	CHKD	DATE
SUNIL KUMAR		KP			SS	

REV NO | DATE | ZONE | DESCRIPTIONS | BY | APPRD

REVISIONS

REFERENCES

DRG. NO.

PIPELINE/PIPING DESIGN CODE	ASME B 31.8/ OISD 226	DESIGN FACTOR – 0.5

ITEM	NOMINAL DIAMETER (INCHES)	0.50	0.75	1.00	1.50	2.00	3.00	4.00	6.00	8.00	10.0	12.0	14.0
PIPE	WALL THICKNESS (MM/SCH)	S160	S160	XS	XS	XS	STD	STD	STD	STD	STD	STD	STD
	MATERIAL	ASTM A333 GR.6											
	DIMENSION STD.	B36.10											
	METHOD OF MANUFACTURE, ENDS	SEAMLESS PE				SEAMLESS BE							
FLANGE	MATERIAL AND GRADE	ASTM A 350 GR. LF2, CL–I											
	TYPE, FLANGE FACING	SW. RF 125AARH				WN. THICKNESS TO MATCH PIPE THICKNESS, RF 125AARH							
	DIMENSION STD.	B16.5											
BLIND FLANGE	MATERIAL AND GRADE	ASTM A 350 GR. LF2, CL–I											
	FLANGE FACING	RF 125AARH											
	DIMENSION STD.	B16.5											
BLANK	MATERIAL AND GRADE	ASTM A 350 GR. LF2, CL–I											
	FLANGE FACING	FF 125AARH											
	DIMENSION STD.	B16.48											
	TYPE	FIG.8 FLANGE				SPACER & BLIND							
BOLTING	STUD BOLTS (FULLY THREADED)	A 320 GR L7, B–18.2											
	NUTS (HEAVY HEXAGONAL)	A 194 GR 4, B–18.2											
GASKET	TYPE, MATERIAL AND Dmn. STD.	SPIRAL, SP.WND SS316+GRAPHITE FILLED, B–16.20–ANSI B16.5,											
ELBOW–90 ELBOW–45	MATERIAL	ASTM A350 GR.LF2				ASTM A 420 GR.WPL6							
	END DETAIL	SW,6000#		SW,3000#		BW, 1.5D							
	DIMENSION STD.	B–16.11				B–16.9							
T–EQUAL T–RED	MATERIAL	ASTM A350 GR.LF2				ASTM A 420 GR.WPL6							
	END DETAIL	SW,6000#		SW,3000#		BW							
	DIMENSION STD.	B–16.11				B–16.9							
CAP & PLUG (UPTO 1.5")	MATERIAL	ASTM A350 GR.LF2				ASTM A 420 GR.WPL6							
	END DETAIL	SCRF6000		SCRF3000		BW, THK TO MATCH PIPE THICKNESS							
	DIMENSION STD.	B–16.11				B–16.9							
FITTING	MATERIAL	ASTM A350 GR.LF2				ASTM A 420 GR.WPL6							
	END DETAIL	SW–6000		SW–3000		BW, THICKNESS TO MATCH PIPE THICKNESS							
	DIMENSION STD.	B–16.11				B–16.9							
	TYPE	COUPLING FULL,HALF LH.,RED.				RED. CON. RED. ECC.							
O'LET	MATERIAL	ASTM A350 GR.LF2				ASTM A 350 GR.LF2							
	END DETAIL	SW,6000#		SW,3000#		BW							
	DIMENSION STD.	MSS–SP97				MSS–SP97							
	TYPE	SOCKOLET				WELDOLET							

SECTION: OIL & GAS

	NAME	DATE
DSGN	KP	
DRWN		
CHKD	SS	
APPROVED	SUNIL KUMAR	

NATURAL GAS PIPELINE PROJECT

PIPING MATERIAL SPECIFICATIONS 150# (A4A)

SCALE : N.T.S.

APPENDIX–II

(SH. 2 OF 2)

REV 0

मेकॉन लिमिटेड

MECON LIMITED

REV NO | DATE | ZONE | DESCRIPTIONS | BY | APPRD

REVISIONS

REFERENCES

DRG. NO.

ANSI CLASS: 300 #	CORROSION ALLOWANCE: 1.5 MM	TEMP °C	−29.0	38.0	50	100	150	200
		PRESS. KG/CM^{2}g	52.1	52.1	51.10	47.52	45.98	44.60
SERVICE : NATURAL GAS		BASE MATERIAL: CARBON STEEL (MATERIAL GROUP 1.1)						

NOTES: –

1. ALL VENTS & DRAIN SHALL BE PROVIDED WITH PLUG VALVE UNLESS MENTIONED OTHERWISE IN P&IDs.
2. FITTINGS SHALL BE OF SEAMLESS CONSTRUCTION UP TO 16" AND SHALL BE OF WELDED CONSTRUCTION 18" AND ABOVE.
3. WALL THICKNESS FOR LINEPIPE USED IN VARIOUS SECTIONS SHALL BE AS PER TABLE–1 OF PMS.
4. BALL VALVE TO BE USED IN MAINLINE SHALL HAVE BUTT WELDED ENDS EXCEPT FOR THE VALVES USED FOR HOT TAPPING WHICH SHALL BE ONE SIDE BUTT WELDED AND OTHER SIDE FLANGED.
5. PROCUREMENT OF MATERIALS SHALL BE AS PER DETAILED RELEVANT SPECIFICATIONS.
6. DESIGN PRESSURE & TEMP. FOR PIPELINE AND RELATED FACILITIES ARE 49 Kg/cm² g & (–29° TO +65°C) RESPECTIVELY.
7. PRESSURE–TEMPERATURE RATING INDICATED ARE FOR FLANGES ONLY IN ACCORDANCE WITH ANSI B 16.5
8. FOR VALVES,STEELPIPE AND ASSOCIATED STEEL COMPONENTS OF 2" & LARGER NOTCH TOUGHNESS PROPERTIES SHALL BE AS SPECIFIED. IN RELEVANT SPECIFICATIONS/CODES, MECON'S STANDARD TECHNICAL SPECIFICATIONS AND DATA SHEETS ETC.
9. AT STATIONS, BRANCH CONNECTIONS SHALL BE AS PER BRANCH CONNECTION TABLE BELOW
10. ALL BUTT WELDS SHALL BE 100% RADIOGRAPHED.
11. 100% OF SOCKET WELD SHALL BE SUBJECTED TO MPI/DPT.
12. PRESSURE–TEMPERATURE RATING OF VALVE BODY SHALL BE AS PER API 6D.
13. PIPELINE DESIGN CODE – ASME B 31.8 & OISD 226.
14. FOR PIPELINE SPECIALITY ITEMS (SCRAPPER TRAP, BARRED TEE, IJ, LR BENDS ETC.) AND THEIR MATERIAL DESCRIPTIONS REFER DATA SHEET OF RESPECTIVE ITEMS.

STATION PIPING MATERIAL SPECIFICATION

ITEM	SIZE	DESCRIPTION
MAINTENANCE JOINTS	ALL	FLGD., BUT TO BE KEPT MINIMUM
PIPE JOINTS	1.5" & BELOW	SOCKET WELD
	2" & ABOVE	BUTT WELDED
DRAINS	ON LINES ≤ 1.5"	3/4", AS PER MEC/SD/05/21/15/03
	ON LINES ≥ 2"	3/4" OR AS PER P&ID, MEC/SD/05/21/15/01
VENTS	ON LINES ≤ 1.5"	3/4", AS PER MEC/SD/05/21/15/03
	ON LINES ≥ 2"	3/4" OR AS PER P&ID, MEC/SD/05/21/15/01
TEMP. CONN.	1.5"	FLGD. INSTL. AS PER MEC/SD/05/21/15/02
PRESS CONN.	3/4"	SCH. 160 NIPPLE WITH BALL VALVE TO SPEC. INSTALLATION AS PER MEC/SD/05/21/15/05

BRANCH CONNECTIONS

E	TEES BW
H	H. COUPLING
P	PIPE TO PIPE
R	REINFORCED
S	SOCKETLETS
T	TEES SW/
W	WELDOLETS
D	TEE WITH RED.

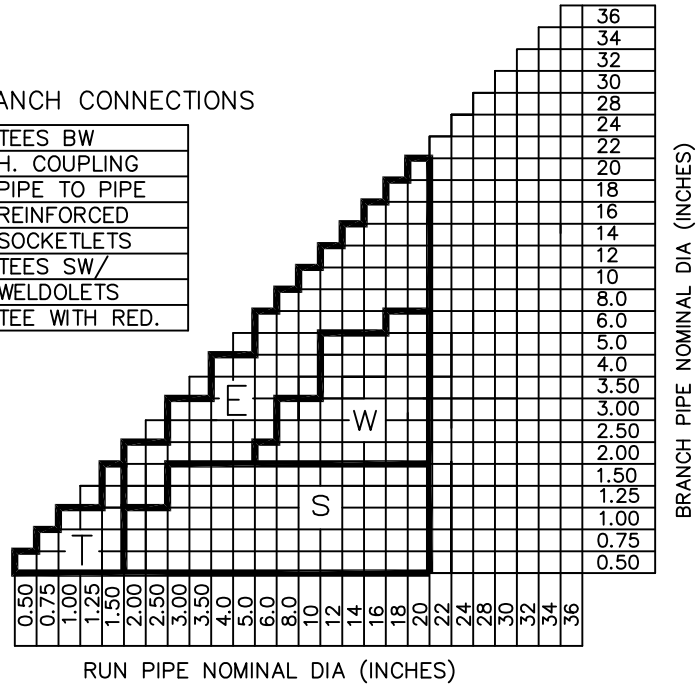

REV NO	DATE	ZONE	DESCRIPTIONS	BY	APPRD

REVISIONS

REFERENCES

DRG. NO.

	NAME	DATE	CHKD	DATE
DSGN	KP		SS	
DRWN				
APPROVED	SUNIL KUMAR			

SECTION: OIL & GAS

NATURAL GAS PIPELINE PROJECT

PIPING MATERIAL SPECIFICATIONS 300# (B1A)

SCALE : N.T.S.

APPENDIX–II (SH. 1 OF 2)

REV 0

मेकॉन लिमिटेड

MECON LIMITED

PIPELINE/PIPING DESIGN CODE	ASME B 31.8/ OISD 226	DESIGN FACTOR – 0.5

ITEM	NOMINAL DIAMETER (INCHES)	0.50	0.75	1.00	1.50	2.00	3.00	4.00	6.00	8.00	10.0	12.0	14.0	16.0	18.0	20.0
PIPE	WALL THICKNESS (MM/SCH)	S160	S160	XS	XS	XS	STD	S40	S40	7.9	STD	S40	S40	S40	S40	15.9
	MATERIAL	ASTM A106 GR.B				ASTM A106 GR.B (CHARPY)				API 5L GR.B PSL2						
	DIMENSION STD.	B36.10								API 5L						
	METHOD OF MANUFACTURE, ENDS	SEAMLESS PE				SEAMLESS BE								BE SAW		
FLANGE	MATERIAL AND GRADE	ASTM A 105				ASTM A 105 (CHARPY)										
	TYPE, FLANGE FACING	SW. RF 125AARH				WN. THICKNESS TO MATCH PIPE THICKNESS,RF 125AARH										
	DIMENSION STD.	B16.5														
BLIND FLANGE	MATERIAL AND GRADE	ASTM A 105				ASTM A 105 (CHARPY)										
	FLANGE FACING	RF 125AARH														
	DIMENSION STD.	B16.5														
BLANK	MATERIAL AND GRADE	ASTM A 105				ASTM A 105 (CHARPY)										
	FLANGE FACING	FF 125AARH														
	DIMENSION STD.	B16.48														
	TYPE	FIG.8 FLANGE									SPACER & BLIND					
BOLTING	STUD BOLTS (FULLY THREADED)	A 193 GR B7, B–18.2														
	NUTS (HEAVY HEXAGONAL)	A 194 GR 2H, B–18.2														
GASKET	TYPE ,MATERIAL AND Dmn. STD.	SPIRAL 300# , SP.WND SS316+GRAPHITE FILLED, B–16.20–ANSI B16.5,														
ELBOW–90 ELBOW–45	MATERIAL	ASTM A 105				ASTM A 234 GR.WPB (CHARPY)										
	END DETAIL	SW,6000#		SW,3000#		BW, 1.5D										
	DIMENSION STD.	B–16.11				B–16.9										
T–EQUAL T–RED	MATERIAL	ASTM A 105				ASTM A 234 GR.WPB (CHARPY)										
	END DETAIL	SW,6000#		SW,3000#		BW, THICKNESS TO MATCH PIPE THICKNESS										
	DIMENSION STD.	B–16.11				B–16.9										
CAP	MATERIAL	ASTM A 105				ASTM A 234 GR.WPB (CHARPY)										
	END DETAIL	SCRF6000#		SCRF3000#		BW,THICKNESS TO MATCH PIPE THICKNESS										
	DIMENSION STD.	B–16.11				B–16.9										
FITTING	MATERIAL	ASTM A 105				ASTM A 234 GR.WPB (CHARPY)										
	END DETAIL	SW,6000#		SW,3000#		BW,THICKNESS TO MATCH PIPE THICKNESS										
	DIMENSION STD.	B–16.11				B–16.9										
	TYPE	COUPLING FULL,HALF LH.,RED.				RED. CON. RED. ECC.										
O'LET	MATERIAL	ASTM A 105				ASTM A 105 (CHARPY)										
	END DETAIL	SW,6000#		SW,3000#		BW										
	DIMENSION STD.	MSS–SP97				MSS–SP97										
	TYPE	SOCKOLET				WELDOLET										

SECTION: OIL & GAS

	NAME	DATE
DSGN	KP	
DRWN		
CHKD	SS	
APPROVED	SUNIL KUMAR	

REV NO | DATE | ZONE | DESCRIPTIONS | BY | APPRD

REVISIONS

REFERENCES

NATURAL GAS PIPELINE PROJECT

PIPING MATERIAL SPECIFICATIONS 300# (B1A)

मेकॉन लिमिटेड

MECON LIMITED

SCALE : N.T.S.

APPENDIX–II

(SH. 2 OF 2)

DRG. NO.

REV 0

ANSI CLASS: 300#	CORROSION ALLOWANCE: 1.5MM	TEMP °C	−45	38	50	80	100	120	150
		PRESS. KG/CM^2g	48.95	48.95	48.44	46.72	46.19	45.54	44.76
SERVICE : RLNG		BASE MATERIAL: CARBON STEEL (MATERIAL GROUP 1.3)							

NOTES: –

1. ALL VENTS & DRAIN SHALL BE PROVIDED WITH PLUG VALVE UNLESS MENTIONED OTHERWISE IN P&IDs.
2. FITTINGS SHALL BE OF SEAMLESS CONSTRUCTION UP TO 16" AND SHALL BE OF WELDED CONSTRUCTION 18" AND ABOVE.
3. WALL THICKNESS FOR LINEPIPE USED IN VARIOUS SECTIONS SHALL BE AS PER TABLE–1 OF PMS.
4. BALL VALVE TO BE USED IN MAINLINE SHALL HAVE BUTT WELDED ENDS EXCEPT FOR THE VALVES USED FOR HOT TAPPING WHICH SHALL BE ONE SIDE BUTT WELDED AND OTHER SIDE FLANGED.
5. PROCUREMENT OF MATERIALS SHALL BE AS PER DETAILED RELEVANT SPECIFICATIONS.
6. PRESSURE–TEMPERATURE RATING INDICATED ARE FOR FLANGES ONLY IN ACCORDANCE WITH ANSI B 16.5
7. FOR VALVES,STEELPIPE AND ASSOCIATED STEEL COMPONENTS OF 2" & LARGER NOTCH TOUGHNESS PROPERTIES SHALL BE AS SPECIFIED. IN RELEVANT SPECIFICATIONS/CODES, MECON'S STANDARD TECHNICAL SPECIFICATIONS AND DATA SHEETS ETC.
8. AT STATIONS, BRANCH CONNECTIONS SHALL BE AS PER BRANCH CONNECTION TABLE BELOW
9. ALL BUTT WELDS SHALL BE 100% RADIOGRAPHED.
10. 100% OF SOCKET WELD SHALL BE SUBJECTED TO MPI/DPT.
11. PRESSURE–TEMPERATURE RATING OF VALVE BODY SHALL BE AS PER API 6D.
12. PIPELINE DESIGN CODE – ASME B 31.8 & OISD 226.
13. FOR PIPELINE SPECIALITY ITEMS (SCRAPPER TRAP, FLOW TEE, IJ, LR BENDS ETC.) AND THEIR MATERIAL DESCRIPTIONS REFER DATA SHEET OF RESPECTIVE ITEMS.
14. DESIGN PRESSURE &TEMP. FOR PIPELINE AND RELATED FACILITIES ARE 49 KG/cm^2g &(−45° TO +65° C) RESPECTIVELY.

STATION PIPING MATERIAL SPECIFICATION

ITEM	SIZE	DESCRIPTION
MAINTENANCE JOINTS	ALL	FLGD., BUT TO BE KEPT MINIMUM
PIPE JOINTS	1.5" & BELOW	SOCKET WELD
	2" & ABOVE	BUTT WELDED
DRAINS	ON LINES ≤ 1.5"	3/4", AS PER MEC/SD/05/21/15/03
	ON LINES ≥ 2"	3/4" OR AS PER P&ID, MEC/SD/05/21/15/01
VENTS	ON LINES ≤ 1.5"	3/4", AS PER MEC/SD/05/21/15/03
	ON LINES ≥ 2"	3/4" OR AS PER P&ID, MEC/SD/05/21/15/01
TEMP. CONN.	1.5"	FLGD. INSTL. AS PER MEC/SD/05/21/15/02
PRESS CONN.	3/4"	NIPPLE WITH BALL VALVE TO SPEC. INSTALLATION AS PER MEC/SD/05/21/15/05

BRANCH CONNECTIONS

E	TEES BW
H	H. COUPLING
P	PIPE TO PIPE
R	REINFORCED
S	SOCKETLETS
T	TEES SW/
W	WELDOLETS
D	TEE WITH RED.

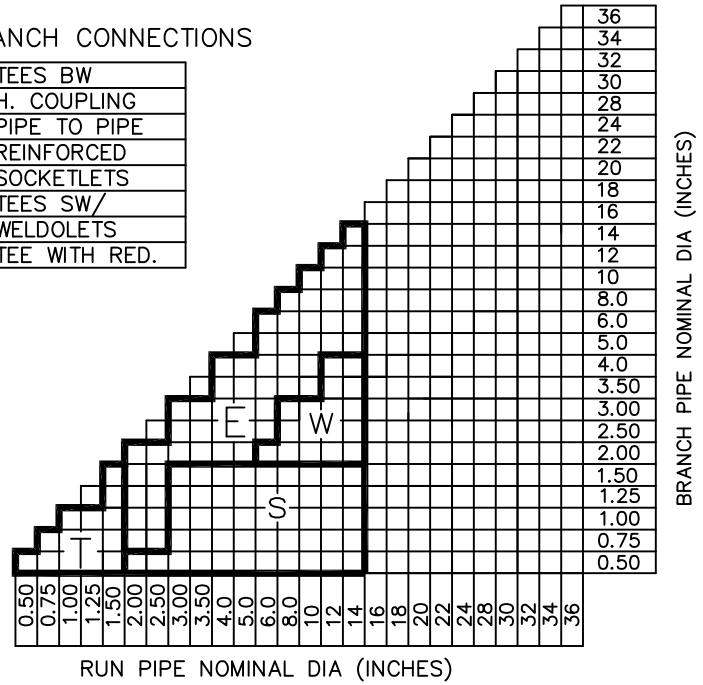

SECTION: OIL & GAS

	NAME	DATE
DSGN	KP	
DRWN		
CHKD	SS	
APPROVED	SUNIL KUMAR	

NATURAL GAS PIPELINE PROJECT

PIPING MATERIAL SPECIFICATIONS 300# (B4A)

SCALE : N.T.S.

APPENDIX–IV (SH. 1 OF 2)

REV 0

मेकॉन लिमिटेड

MECON LIMITED

ISO 9001:2000 COMPANY

REVISIONS: REV NO | DATE | ZONE | DESCRIPTIONS | BY | APPRD

REFERENCES

DRG. NO.

PIPELINE/PIPING DESIGN CODE	ASME B 31.8/ OISD 226	DESIGN FACTOR – 0.5

ITEM	NOMINAL DIAMETER (INCHES)	0.50	0.75	1.00	1.50	2.00	3.00	4.00	6.00	8.00	10.0	12.0	14.0	16.0	18.0	20.0	22.0	24.0
PIPE	WALL THICKNESS (MM/SCH)	S160	S160	XS	XS	XS	STD	STD	STD	STD	STD	S40	S40	S30	S30	S30	S30	S30
	MATERIAL	ASTM A333 GR.6																
	DIMENSION STD.	B36.10																
	METHOD OF MANUFACTURE, ENDS	SEAMLESS PE				SEAMLESS BE								BE, SAW				
FLANGE	MATERIAL AND GRADE	ASTM A 350 GR. LF2, CL–I																
	TYPE, FLANGE FACING	SW. RF 125AARH				WN. THICKNESS TO MATCH PIPE THICKNESS, RF 125AARH												
	DIMENSION STD.	B16.5																
BLIND FLANGE	MATERIAL AND GRADE	ASTM A 350 GR. LF2, CL–I																
	FLANGE FACING	RF 125AARH																
	DIMENSION STD.	B16.5																
BLANK	MATERIAL AND GRADE	ASTM A 350 GR. LF2, CL–I																
	FLANGE FACING	FF 125AARH																
	DIMENSION STD.	B16.48																
	TYPE	FIG.8 FLANGE									SPACER BLIND							
BOLTING	STUD BOLTS (FULLY THREADED)	A 320 GR L7, B–18.2																
	NUTS (HEAVY HEXAGONAL)	A 194 GR 4, B–18.2																
GASKET	TYPE, MATERIAL AND Dmn. STD.	SPIRAL, SP.WND SS316+GRAPHITE FILLED, B–16.20–ANSI B16.5,																
ELBOW–90 ELBOW–45	MATERIAL	ASTM A350 GR.LF2				ASTM A 420 GR.WPL6								ASTM A 420 GR.WPL6W				
	END DETAIL	SW,6000#		SW,3000#		BW, 1.5D												
	DIMENSION STD.	B–16.11				B–16.9												
T–EQUAL T–RED	MATERIAL	ASTM A350 GR.LF2				ASTM A 420 GR.WPL6								ASTM A 420 GR.WPL6W				
	END DETAIL	SW,6000#		SW,3000#		BW												
	DIMENSION STD.	B–16.11				B–16.9												
CAP & PLUG (UPTO 1.5")	MATERIAL	ASTM A350 GR.LF2				ASTM A 420 GR.WPL6								ASTM A 420 GR.WPL6W				
	END DETAIL	SCRF6000		SCRF3000		BW, THK TO MATCH PIPE THICKNESS												
	DIMENSION STD.	B–16.11				B–16.9												
FITTING	MATERIAL	ASTM A350 GR.LF2				ASTM A 420 GR.WPL6								ASTM A 420 GR.WPL6W				
	END DETAIL	SW–6000		SW–3000		BW, THICKNESS TO MATCH PIPE THICKNESS												
	DIMENSION STD.	B–16.11				B–16.9												
	TYPE	COUPLING FULL,HALF LH.,RED.				RED. CON. RED. ECC.												
O'LET	MATERIAL	ASTM A350 GR.LF2																
	END DETAIL	SW,6000#		SW,3000#		BW												
	DIMENSION STD.	MSS–SP97				MSS–SP97												
	TYPE	SOCKOLET				WELDOLET												

SECTION: OIL & GAS

	NAME	DATE
DSGN	KP	
DRWN		
CHKD	SS	
APPROVED	SUNIL KUMAR	

REV NO | DATE | ZONE | DESCRIPTIONS | BY | APPRD

REVISIONS

REFERENCES

NATURAL GAS PIPELINE PROJECT

PIPING MATERIAL SPECIFICATIONS 300# (B4A)

SCALE : N.T.S.

APPENDIX–IV

(SH. 2 OF 2)

मेकॉन लिमिटेड

MECON LIMITED

DRG. NO.

REV 0

TECHNICAL SPECIFICATION
FOR
PRE-COMMISSIONING AND COMMISSIONING

TS NO.: MEC/05/28/M/000/1093

(OIL & GAS SBU)
MECON LIMITED
DELHI 110 092

CONTENTS

SL. NO.	DESCRIPTION
1.0	INTRODUCTION
2.0	RESPONSIBILITY OF CONTRACTOR
3.0	SCOPE OF WORK
4.0	DOCUMENTATION
5.0	SPARES AND CONSUMABLES
6.0	SAFETY

ANNEXURE – I : FORMAT FOR BIODATA OF KEY PERSONNEL FOR COMMISSIONING

ANNEXURE – II : QUESTIONNAIRE

ANNEXURE – III : FORMAT TO BE USED DURING PRE-COMMISSIONING AND COMMISSIONING (TOTAL 5 FORMATS)

F O R M A T – I : INTIMATION REGARDING SYSTEM COMPLETION

F O R M A T - II : CHECKLIST

F O R M A T - III : READY FOR PRE-COMMISSIONING CERTIFICATE

F O R M A T – IV : READY FOR COMMISSIONING CERTIFICATE

F O R M A T - V : COMPLETION OF COMMISSIONING CERTIFICATE

1.0 INTRODUCTION

This specification covers the minimum technical requirements for:

i) Pre-commissioning activities consists of:

- Carrying out pre-commissioning checks of the underground pipeline system including above ground piping at dispatch station and at receipt stations, Sectionalizing Valve (SV) stations and tap-off / hook-up piping.
- Dewatering of the pipeline.
- Flushing and dry air blowing of underground & above ground piping at dispatch and receipt stations, SV stations and tap-off/ hook–up point.
- Swabbing of pipeline.
- Preparation of detailed commissioning procedures

ii) Commissioning activities consisting of Drying, Inertisation, Gas-in/ Commissioning, stabilization and 72 hours run of all the pipe lines and facilities mentioned in (i).

Bidder, along with his bid documents, is required to submit the following:

- Execution plan and method statement for pre-commissioning and commissioning activities.
- Past experience of pre-commissioning and commissioning activities carried out for a similar pipeline system / network.
- Plan to engage an agency / subcontractor for these activities (if envisaged).
- Organization charts of bidder's proposed pre-commissioning and commissioning team indicating the positions with the required qualifications and experience.
- Bio datas of Key personnel comprising the commissioning team along with their contact nos. In case the member of commissioning team as mentioned in the offer is not available at the actual time of commissioning then the contractor shall ensure a replacement with equivalent qualification & experience. The format of bio data is enclosed as **Annexure-I**.
- Clause wise list of deviations, if any, from this technical specification. In the absence of this, it shall be considered that the bidder has no deviation.
- Questionnaire as given in **Annexure-II**.

2.0 RESPONSIBILITY OF CONTRACTOR

The contractor shall be responsible for all the pre-commissioning and commissioning activities that need to be carried out for the pipeline system.

2.1 Pre-commissioning

In order to execute and perform pre-commissioning activities, the contractor shall be responsible for (but not limited to):

- Carrying out pre-commissioning checks of the underground pipeline system including above ground piping at dispatch station and at receipt stations, Sectionalizing Valve (SV) stations and tap-off / hook-up piping.
- Dewatering of the pipeline.
- Flushing and dry air blowing of underground & above ground piping at dispatch and receipt stations, SV stations and hook–up point.
- Swabbing of pipeline.
- Low pressure leak check (with air) for the aboveground section of the pipelines.
- Supply and supervision of manpower for pre-commissioning.
- Supply and operation of machinery & equipment for pre-commissioning.
- Supply and use of materials and consumables as required for the pre-commissioning activities.
- Design and supply all temporary line connections, pig launcher/receiver, valves, instruments, manpower etc. as required during various operations.
- Preparation of detailed pre-commissioning procedures, activity schedules, bar charts, schemes etc. This shall include preparation of detailed procedures for dewatering, flushing, swabbing and low pressure leak check and shall address the sequence and methodology describing all operations, data on materials, equipment, instruments, consumables, communication systems, necessary calculations, detailed time schedule and organization chart.
- All necessary work to perform the job successfully including all modifications that would be required.

The contractor shall demonstrate to the COMPANY (for COMPANY's approval) the successful completion of all of the above-mentioned activities.

In the event of any detail, which is not fully addressed, contractor should warrant that work shall be performed in accordance with the relevant codes, Company's specifications and the best recognized Engineering guidelines and practices being followed in the on-shore pipeline industry.

2.2 Drying, Inertisation, Gas-in / Commissioning, stabilization and 72 hours run

In order to execute and perform commissioning related activities, the contractor shall be responsible for (but not limited to):

- Drying of the underground pipeline and above ground piping system at dispatch and receipt stations, above ground piping system at SV stations and hook-up / tap-off points to a water dew point of –8 °C at atmospheric pressure, and maintain this dew point in the pipeline, till inertisation and gas-in activities commence.

- Commissioning checks including Safety review prior to start of commissioning activities to achieve 'Ready for commissioning' status for underground pipeline and above ground piping system at dispatch and receipt stations, above ground piping system at SV stations and hook-up / tap-off points.
- Inertisation of the pipeline system including above ground piping system at dispatch and receipt stations, above ground piping system at SV stations and hook-up / tap-off points.
- Gas-in activities including pressurization, carrying out high pressure leak checks and establishment of flows in the pipeline system including above ground piping at dispatch and receipt stations, SV stations, IP station and hook-up points.
- Stabilization and 72 hours run of the pipeline system.
- Supply and supervision of manpower for commissioning.
- Supply and operation of machinery & equipment for commissioning.
- Supply and use of materials and consumables as required for the commissioning activities.
- Design and supply all temporary line connections, pig launcher/receiver, valves, instruments, manpower etc. as required during various operations.
- Preparation of detailed commissioning procedures, activity schedules, bar charts, schemes etc. This shall include preparation of detailed procedures for drying, inertisation, gas-in / commissioning operations, high pressure leak check operations, pressurization, establishing flows and 72 hours run of the pipeline system, and shall address the sequence and methodology describing all operations, data on materials, equipment, instruments, consumables, communication systems, necessary calculations, detailed time schedule and organization chart.
- Ensuring all communication facilities are in place and in proper working condition prior to start of commissioning activities of the pipeline system.
- All necessary work to perform the job successfully including all modifications that

would be required.

The contractor shall demonstrate to the COMPANY (for COMPANY's approval) the successful completion of all of the above-mentioned activities.

In the event of any detail, which is not fully addressed, contractor should warrant that work shall be performed in accordance with the relevant codes, Company's specifications and the best recognized Engineering guidelines and practices being followed in the on-shore pipeline industry.

2.3 Mechanical Completion

Mechanical Completion of system shall mean completion of underground / aboveground pipeline system and station work including pre-commissioning along with ECP of U/G pipeline and make the system ready to start commissioning activities.

3.0 SCOPE OF WORK

The work to be performed by the Contractor as part of the pre-commissioning activities for the facilities outlined in paragraphs (i) of Section-1.0 above and commissioning related activities for the facilities outlined in paragraphs (ii) of Section-1.0 above shall consist of the following:

3.1 Pre-commissioning activities

3.1.1 Pre-commissioning checks

Pre-commissioning checks shall be carried out for the pipeline system to ascertain that the pipeline system has been mechanically completed in all respects. These checks shall cover the pipelines including distribution network system, dispatch and receipt stations, I.P. stations, sectionalizing valve stations and the hook up points. The pre-commissioning checks shall include the following:

A) System Checks

The entire facilities shall be checked against the latest P&ID's, Engineering and Vendor drawings / documents and other design specifications. Any shortcomings observed shall be listed down in the form of punch lists and duly attended.

B) Checking of Field Instruments

All the field instruments like actuated valves, control valves, shutdown valves, transmitters, solenoid valves, shut down switches, alarms etc. shall be checked physically and also for their intended application by simulating the operating condition. It will also include checking of Different meters, gauges, action of

actuated valves, control valves, shutdown valves etc.

C) Survey of the Pipelines

This shall be performed to confirm that proper fittings/supports, cathodic protection system, route markets, warning signs, fencing around SV stations, crash barriers etc. have been installed along the pipeline.

D) Checking of Communication System

This is to check that there is proper communication with adequate back up power to ensure uninterrupted communication.

E) Checking of Electrical Distribution System

This is to ensure safety and also to ensure an uninterrupted power supply during startup and normal pipeline operation.

F) Checking of Instruments, Controls & Interlocks

This is to check that instrument controls and interlocks are functional as per the normal operating conditions.

G) Checking of Utilities

This is to check that utilities like power, nitrogen, UPS system, instrument air, etc. are available prior to start-up.

H) Any other checks as may be considered necessary.

3.1.2 Dewatering

3.1.2.1 General

Dewatering of a pipeline section shall be done subsequent to the hydro-test of the respective pipeline section. During the dewatering operation, the major quantity of hydro-test water shall be removed from the pipelines and distribution network. It is the responsibility of the contractor to develop suitable dewatering procedure and submit the same for Company's approval.

The disposal of the water shall be performed such that no harm is done to the environment and the Dewatering procedure should indicate this disposal methodology.

3.1.2.2 Operational requirements

The dewatering operation for the pipelines shall consist of a number of dewatering pig runs and dry air shall be used as propellant for pig trains.

Cup pigs shall be used and will be suitable for traversing the entire length of the pipelines / pipe segments being dewatered. Contractor shall ensure that all the pigs are designed to prevent damage to the pipeline's internal coating (if any).

The contractor shall propose the minimum speed and the backpressure of the pigs in order that continuous operation will be performed without the pig getting stuck. Contractor shall submit all the calculations regarding this procedure and a contingency plan for implementation in case the pigs get stuck.

Contractor shall provide a suitable compressor for oil-free air with sufficient capacity and pressure.

Upon arrival of the pigs at the receiving end, the Contractor in the presence of Company's representative shall remove the pigs without delay.

3.1.2.3 Flushing of aboveground piping

Flushing of above ground piping at dispatch and receipt stations, SV stations and hook-up / tap-off points shall be done with water to remove debris from within the piping and then with dry air to remove the residual amount of water from the aboveground piping.

3.1.2.4 Acceptance criteria

Before proceeding to the next stage of operations, Contractor shall ensure that bulk of the water has been removed from the pipeline system. Contractor shall specify when the dewatering phase (for the underground pipeline) and flushing and dry air blowing (for above ground piping) is finished and shall obtain approval of the company before proceeding to the next phase.

3.1.3 Swabbing

3.1.3.1 General

The swabbing operation, which shall be done subsequent to the dewatering operation, is meant to reduce the remaining water in the pipeline to acceptable condition and to ensure removal of free water left inside the pipeline prior to final drying, Inertisation and commissioning of the Pipeline system. This is done by driving number of foam pigs propelled by oil free compressed dry air, which can pick up free water in the pipeline. Hence for swabbing, air compressors of required capacity, after-coolers and dryers should be deployed by the contractor.

Contractor may suggest alternate methodology for Swabbing operation. The swabbing

activity is precursor for drying of the pipeline and is basically to reduce duration of drying.

The contractor shall submit the detailed procedure and the duration of the swabbing operation and obtain approval of the company before starting the operation.

3.1.3.2 Acceptance criteria

The Contractor shall ensure that swabbing operation is considered to be completed when it is considered that there is no free water left in the pipeline. This shall be subject to Company's approval.

3.1.4 Safety review prior to start of commissioning activities

A pre-startup safety review of the pipeline system including the underground pipeline and the above ground piping at dispatch and receipt stations, SV stations and hook-up / tap-of points shall be carried out by the Contractor before permitting entry of natural gas into the new pipeline facility. Company / Company's representative shall also participate in the pre-startup safety review.

3.2 Commissioning related activities

3.2.1 Drying

Before charging the line with gas, the contractor may propose to dry the pipeline either by super drying or vacuum drying or any other suitable technique as approved by Engineer-in-charge (EIC). Following specifications shall govern the drying procedures and shall be submitted for approval of the EIC.

3.2.1.1 **Vacuum Drying**

a) General

The contractor shall dry the underground pipeline and the above ground piping at dispatch and receipt stations, SV stations and hook-up / tap-off points with vacuum drying technique prior to charging natural gas.

Water vapour shall be evacuated from the pipeline by vacuum units alone or in combination with dry air or dry nitrogen vacuum purging as specified in the scope of work. The final dew point temp. of the dry pipeline shall be -8 °C, which is equivalent to a pressure of 3 mbar (absolute), unless otherwise specified in the scope of work.

Vacuum drying should consist of the following stages:

- pre-drying checks;
- one or more leak tests;
- pump-down;
- evaporation/evacuation, including vacuum purging(if applicable);
- soak test/acceptance test;

The size of the vacuum units should be sufficient to reduce the pressure in the pipeline to the vaporisation pressure during pump-down within typically 12 h to 36 h of commencement of the pump-down operation, depending on the length and diameter of the pipeline. Vacuum units having excessive capacity would draw down the pressure too rapidly, which could cause localised ice formation.

The Contractor shall prepare a theoretical pressure/ time graph each of the drying phases and submit it along with detailed work procedure for approval of PMC/CLIENT.

b) **Pre-drying checks**

Before commencement of vacuum drying the Contractor shall verify that:

- The pipeline has been isolated from other pipelines and piping by closing valves at the battery limit. As a precaution against possible “air-in” leaks through the battery limit valves, all valves immediately adjacent to the battery limit valves shall also be closed wherever possible;
- All pressure safety valves, actuator tappings etc. shall be isolated by closing the respective valves;
- All vent drain, utility connections, tapping valves shall be closed and ends shall be blind flanged;
- The blow down piping (if any) shall also be isolated by closing the respective valves;
- The bypass piping across the mainline valves at SV stations shall be isolated by closing all the by-pass valves;
- valves are designed for vacuum drying and have been placed in to the half open position;
- valve body bleeder parts are vacuum tight;
- Temporary connections, pig trap valves and pig trap end closure seals are able to withstand the prevailing vacuum pressure. If this is not the case, Contractor shall provide adequate seals for the vacuum drying operation and replace these seals by the permanent seals once the vacuum drying operation has been completed.

c) Leak tests

I. Low pressure leak check of aboveground station piping

The above ground station piping including all instrument impulse tubing shall be pressurised with air to a minimum pressure of 6 kg/cm^2. All flanged threaded and tubing joints shall be checked for leaks by soap solution.

II. Leak test of pipeline

The piping connecting the vacuum unit with the pipeline, including pig trap(s) and vacuum unit(s), shall be isolated from the pipeline and the pressure in the isolated

piping lowered to slightly above the theoretical evaporation pressure.

The vacuum unit shall be switched off and the isolated piping checked for leaks by soap solution. Leaks shall be cured by flange tightening etc.

The pipeline shall then be opened to the vacuum unit(s) and the pressure in the entire system reduced to a pressure of 50 mbar (abs) to 100 mbar (abs) for the final leak test. The pressure shall be maintained at this level and all other piping, such as at the pig trap system at the other end of the pipeline if vacuum drying is carried out from one end only, shall be checked for leaks. Leaks shall be cured as stated above.

After all leaks have been cured, where possible, the vacuum unit shall be turned off and isolated from the pipeline and the pressure in the pipeline and the associated pipework monitored for at least 1 hr. Pressure increases shall be recorded and plotted on a pressure/time chart. From the measured pressure increase, the total leak rate shall calculated. Curing of leaks shall be continued until the calculated total leak rate is less than 10 % of evacuation capacity of the vacuum units at the initial leak test pressure. The final in-leak rate shall be recorded for use when analysing the final soak test results

d) **Pump-down/ pull down**

The pressure in the pipeline shall then be reduced at a steady rate to a vacuum level of 40-50 torr (53- 67 mbar). Alternatively the contractor may reduce the pressure in the pipeline further to a level where the ambient temperature of the pipeline will cause the free water to boil and then eventually to evaporate. The approximate pressure value is calculated in advance but it is easily recognized at site by a fall in the rate of pressure reduction, which is noted from the plot of pressure against time.

A significantly shorter pump down time than that theoretically predicted could indicate freezing and shall be evaluated immediately. The pressure shall be kept at this level, and pig traps and piping inspected for vacuum tightness and any leaks cured.

e) **Evaporation/ evacuation**

As the pressure in the pipeline approaches the saturated vapour pressure at the pipeline's ambient temperature, the rate of vapour evolution will increase, resulting in a reduction in the rate of pressure decrease. During this phase, the pressure will remain at more or less constant level until all the free water has been converted into water vapour. The vaporisation pressure shall be maintained and water vapour evacuated by pumping until all residual water has evaporated. Once all the free water has evaporated from the pipeline, the rate of pressure decrease will increase.

Ice formation in the pipeline and associated fittings shall be avoided by control of the evacuation rate through the vacuum units. A vaporisation pressure plateau at a level markedly lower than expected or erratic pressure fluctuations during plateau are indications of ice formation.

Vaporisation and evacuation by pumping shall continue until the vapour pressure has reached the level that is equivalent to the dew point specified for the dry pipeline This pressure shall be maintained for at least 3 hrs to confirm that a stable balanced vacuum pressure is established throughout the pipeline. Evacuation shall then be stopped and a soak test carried out.

Vacuum purging with dry air or nitrogen at pressures in the range of 4 mbar (abs) to 10 mbar (abs) may be applied in addition to evacuation by pumping to reduce the time needed for conventional evaporation and water vapour evacuation. The rates and pressures are dependent on the performance curves of the vacuum equipment, as the aim is to increase the pressure in the pipeline to an efficient volume transfer level. If applied, purging and evacuation shall continue until the dew point at the vacuum unit is constantly below the dew point for a dry pipeline as specified in the scope of work while replacing at least twice the contents of the pipeline. Purging shall then be stopped, and the pressure reduced to 3 mbar (abs) and maintained at this level for at least 3 hrs to achieve stable conditions in the pipeline. A soak test shall then be performed.

f) **Soak test/acceptance test**

Soak test is carried out to ensure that all free water has been evaporated. All the equipment other than that required for pressure monitoring shall be temporarily isolated from pipeline for a period of at least 12 hrs and pressure is monitored at an interval of 1 hr.

Pressure monitoring shall be carried out by means of pressure gauges and recorders with range 0 mbar to 10 mbar, a reading division of 0.1 mbar and an accuracy of ± 1 % of the measured value.

Initially the pressure will rise as the higher pressure in the centre of the pipeline (or at the opposite end if a single vacuum plant is in operation) balances with that nearest to the vacuum plant. After this initial stabilisation, which should occur well below the evaporation plateau, the test shall be acceptable if the pressure remains more or less constant (+/-5% variation is acceptable) at 3 mbar. If this is not the case, the observed pressure increases must be due to further flashing-off of moisture vapour, indicating that additional drying is required.

3.2.2.2 Super drying

a) **General**

The pipeline shall be dried using super dry air or nitrogen. The contractor shall submit work procedure for super drying in line with the scope of work to Engineer-in-charge for approval prior to start of any activity.

The super drying operation shall follow within 48 hrs of swabbing. In case super

drying of the pipeline does not start within 48 hrs of completion of swabbing, then the swabbing shall be repeated again.

The drying medium to be used shall be as specified in the scope of work or as per the directions of Engineer-in-charge. Dry air or nitrogen drying shall be executed consecutively in the following phases:

- pigging;
- purging for drying; and
- Purging for acceptance testing.

The basis of this technique is to run a series of light weight foam pigs through the pipeline with super dry air or dry nitrogen. The pigs initially absorb large quantities of water and ensure that water in the pipeline is continually spread out in a thin film, thus facilitating evaporation into the dry air system. Where permanent pig- launcher and receivers are not available temporary traps must be connected to the line and the drying unit may then be connected to the pig launcher by flexible hoses of appropriate rating.

The sizing of the drying equipment and calculations of the time required for drying shall be based on a film thickness of the residual water of not less than 0.1 mm for internally uncoated pipes and not less than 0.05 mm for internally coated pipes. Air introduced into the pipeline during dry air drying shall have a dew point of at least 15 °C below the final dew point (-8°C) of the pipeline.

Nitrogen used during drying shall have a minimum dew point of -50 °C at atmospheric pressure.

b) **Pigging**

The pipeline shall be pigged with high sealing disc pigs driven by dry air or nitrogen in combination with water absorbing foam pigs having a large water absorption capacity (approximately 80 % of their body mass), high abrasion resistance and a density between 30 to 50 kg/m^3 as follows:

- the travelling speed of the foam pigs should not exceed 1.2 m/s;
- a back-pressure of at least 0.5 bar shall be maintained at the receiving end; and
- pigs in a pig train should be separated by at least 300 meters

Pigging shall continue until the dew point of the drying medium at the receiving end remains below the dew point specified in the scope of work and does not fluctuate by more than 3°C whilst replacing the content of the line by a pig.

c) **Purging For Drying**

After pigging, the pipeline should be purged with the drying medium with a minimum velocity of 3 m/s in the pipeline at the discharge end. Purging shall continue until the dew point at the discharge end remains below the specified dew

point whilst replacing twice the content of the pipeline at purging pressure.

d) **Purging For Acceptance Testing**

The difficulty in defining the acceptance criterion is that the dew point sampling at each end of the pipeline does not necessarily represent the actual dew point condition prevailing within the whole pipeline. This is because the dry air (or nitrogen) entering the pipeline performs extensive drying at the start of the pipeline and then becomes saturated. As the pressure falls off towards the end of the pipeline, the air (or nitrogen) is again able to absorb moisture. Thus the situation can arise where the beginning and the end of a pipeline are dry but the middle may still be wet, or at a higher dew point than the ends. It can be checked that the acceptance criterion has been met by means of the following procedure.

Upon completion of purging, the pipeline shall be blocked-in for a period of at least 12 hrs and at a pressure of 0.5 bar above the ambient pressure at all points along the pipeline. After this period the pipeline content shall be replaced at the lowest possible pressure and the dew point continuously measured at the discharge end.

Drying is complete when the dew point during acceptance purging remains below the final dew point (-8°C) specified for the pipeline whilst replacing the line content. Purging for drying shall recommence and the acceptance test shall be repeated until this requirement has been met.

Upon completion of the drying, the pipeline shall be blocked in at a pressure of 0.5 bar above the ambient pressure at any point along the pipeline.

e) Preservation after Drying

The Contractor shall increase the pressure in the pipeline with either dry air or dry nitrogen.
The requirements for preservation are as follows:
- the final pipeline pressure to be achieved at the end of the filling operation shall be 0.5 bar above the ambient pressure at any point along the pipeline, plus a margin allowing for the maximum possible ambient temperature fluctuation during the post pre-commissioning period;
- The dew point, pressure and temperature of the medium introduced into the pipeline shall be measured and recorded constantly at the inlet of the pipeline throughout the filling operation;
- Warning signs, in English and the local or working languages, such as "PIPELINE FILLED WITH NITROGEN" or "PIPELINE FILLED WITH DRY AIR" shall be provided and placed at block valve stations and pig trap systems.

3.2.2 Low Pressure leak check for aboveground piping

3.2.2.1 General

The aboveground piping sections of the pipeline system shall be checked for leaks at flange points of piping and equipment, instrument impulse tubing points etc. This shall be done by pressurizing the system piping / equipment with dry compressed air (for this purpose, oil free air compressors shall be used) and testing the system by means of soap solution for leaks.

The contractor shall submit the detailed procedure and the duration of the leak check operations and obtain approval of the company before starting the operation.

3.2.2.2 Acceptance criteria

The leak check operation shall be considered to be completed when the piping system / equipment is free of leaks when tested at a pressure of 6.0 Kg/cm^2 g. This shall be subject to Company's approval.

3.2.3 Ready for Commissioning

After completion of drying activities and safety review prior to startup, Contractor shall notify the Company that the systems associated with the pipeline system including the underground pipeline and the above ground piping at dispatch and receipt stations, SV stations and hook-up / tap-of points are ready for gas-in/commissioning. 'Ready for commissioning status' shall be jointly reviewed by Company and Contractor and final clearance for start-up shall be given by the Company. After such joint assessment, if all the criteria are met, it will then be declared that the pipeline system has reached a stage of 'Ready for Commissioning'.

3.2.4 Inertisation

3.2.4.1 General

Contractor shall carry out inertisation of the entire pipeline system including the underground pipeline and the above ground piping at dispatch and receipt stations, SV stations and hook-up / tap-off points).

3.2.4.2 Operational requirements

During the Inertisation operation, the air left in the pipelines shall be replaced by nitrogen before admitting the natural gas into the pipeline for safe commissioning. The pipeline shall be inertized under vacuum condition after drying is achieved. For this, introduce nitrogen from one end of the pipeline maintaining vacuum from other end of the pipeline. After inertisation, gas charging shall be done into the pipeline.
For above ground piping at dispatch and receipt stations, SV stations and hook-up / tap-

of points, the piping shall be purged with nitrogen till the residual oxygen content in the piping is below 1% (vol/vol).

Nitrogen required for Inertisation purpose of the pipeline and aboveground piping shall be supplied by the contractor and should be of purity level 99.9% or above. Nitrogen gas at ambient temperatures (AND NOT LIQUID NITROGEN) and in completely vaporized and gaseous state shall be used as the inertising medium. In case the source of gaseous nitrogen is from liquid nitrogen tankers, then all precautions (including verification of the lowest tolerable temperature of all components in the system under commissioning) should be ensured.

The contractor shall submit the detailed procedure (in line with the above suggested method or any other acceptable one) and the duration of the inertisation operation and obtain approval of the company before starting the operation. Inertisation shall be followed immediately by charging of pipeline by natural gas.

3.2.4.3 Acceptance Criteria

Inertisation of the pipelines may be accepted to be complete when the required quantity of nitrogen has been introduced into the pipeline. The contractor has to ensure this condition for safe commissioning of the pipeline. For above ground piping at dispatch and receipt stations, SV stations and hook-up / tap-of points, the inertisation may be accepted to be complete when the residual oxygen content in the piping is below 1% (vol/vol).

3.2.5 Gas-in/Commissioning and Stabilization

3.2.5.1 General

Contractor shall carry out gas-in and commissioning activities of the entire pipeline system including the underground pipeline and the above ground piping at dispatch and receipt stations, SV stations and hook-up / tap-of points.

3.2.5.2 Operational requirements

During introduction of natural gas into the pipeline, natural gas shall be the motive fluid for driving the last pig of the nitrogen slug train. The pig train speed shall be maintained at 3 to 4 Km/hr. Maintenance of proper backpressure shall control pig train speed. Venting shall be controlled at the pig-receiving end to achieve the desired dynamics. In this fashion, slowly the desired portion of the pipeline shall be commissioned. Alternatively contractor may propose procedure for introduction of gas in pipeline under vacuum condition after inertisation with Nitrogen.

Subsequently, the pipeline system shall be slowly pressurized upto its operating

conditions and high pressure leak checks of the pipeline system at flange points, instrument points etc. shall be carried out with soap solution at regular intervals during the course of pressurization of the pipeline system. Once the pipeline system is pressurized at its operating conditions, normal gas flows shall be established in the pipeline system.

The contractor shall submit the detailed procedure (in line with the above suggested method or any other acceptable one) and the duration of the commissioning operation and obtain approval of the company before starting the operation.

Commissioning shall also include establishing the process control parameters first at turn down & then at design value stipulated in the process package along with supplementary instructions, if any, from Company / Company's Representative.

3.2.5.3 Acceptance Criteria

The system shall be considered to be commissioned successfully when the pipeline system including the underground pipeline and the above ground piping at dispatch and receipt stations, SV stations and hook-up / tap-of points is charged with natural gas, is free of leaks and run successfully at stable operating conditions with instrumentation / control systems process utilities and support systems taken on line for a minimum period of 72 hours.

The commissioning of pipeline system shall include commissioning of branch lines and associated facilities including auxiliary facilities and aboveground piping.

4.0 DOCUMENTATION

Contractor shall submit for approval of the Company, the complete description, detailed procedures and time schedule for all of the following activities:

- Pre-commissioning checks
- Dewatering
- Flushing
- Swabbing
- Drying
- Low pressure leak check of aboveground piping system with dry compressed air
- Inertisation
- Gas in and commissioning activities (including pressurization of pipeline system, high pressure leak check, establishment of flows and 72 hours run).

All these documents should be prepared covering all aspects of HSE, quality assurance and quality control plans.

Contractor shall ensure that his documents are related to “as-built” conditions of the pipeline and structure involved.

Documents shall also contain all safety plans, procedures, to be followed while carrying out the activities.

Upon successful completion of the work, contractor shall prepare a final report of the work which shall include necessary charts, diagrams, graphs, calculations, recordings, daily logs, measurements, details of the operation, etc. Report shall also include all certificates of calibration of instruments required, together with records of calibration performed at site prior to the start of any operation and the approved pre-commissioning and commissioning formats and check sheets.

5.0 SPARES AND CONSUMABLES

Contractor shall identify and arrange for supply of manpower, spares, tools, tackles and consumables as required for pre-commissioning and commissioning activities.

6.0 SAFETY

Contractor shall follow the safety practices during execution of pre-commissioning and Commissioning works as detailed in the scope of work. He shall also maintain and follow all safety practices equivalent or better than those being practiced by the industry during pre-commissioning and commissioning activities.

ANNEXURE - I

FORMAT FOR BIODATA OF KEY PERSONNEL FOR COMMISSIONING

1. PRPOSED POSITION IN ORGANISATION CHART:
2. NAME:
3. QUALIFICATION:
4. TOTAL YEARS OF EXPERIENCE IN PLANT OPERATION / COMMISSIONING:
5. DETAILS OF COMMISSIONING EXPERIENCE:

SL NO.	PROJECT DESCRIPTION	PLANT CAPACITY	LICENSOR	OWNER	YEAR OF COMMISS.	DURATION OF STAY AT SITE

ANNEXURE - II

QUESTIONNAIRE

CLAUSE NO.	DESCRIPTION OF CLAUSE	AGREED	NOT AGREED	REMARKS
1.0	SCOPE	[ ]	[ ]	
2.0	DEFINITIONS	[ ]	[ ]	
3.0	MANUFACTURER REPRESENTATIVE	[ ]	[ ]	
4.0	DOCUMENT FOR PRECOMMISSIONING AND COMMISSIONING	[ ]	[ ]	
5.0	OTHER REQUIREMENTS	[ ]	[ ]	
6.0	REVIEW/CHECKLISTING/INSPECTION/CO-ORDINATION	[ ]	[ ]	
7.0	COMMISSIONING	[ ]	[ ]	
8.0	CONSUMABLES	[ ]	[ ]	
9.0	SPECIAL REQUIREMENTS	[ ]	[ ]	
10.0	SAFETY	[ ]	[ ]	

NOTE:

1) PLEASE TICK THE RELEVANT BOX.
2) MENTION THE REASON & THE SUB-CLAUSE NOT AGREED IN THE REMARKS COLUMN.

ANNEXURE-III

FORMAT TO BE USED DURING PRE-COMMISSIONING AND COMMISSIONING

(TOTAL 5 FORMATS)

F O R M A T - I

INTIMATION REGARDING SYSTEM COMPLETION

PROJECT:_____ CUSTOMER:_____ UNIT:_____

Following system/sub-system has been mechanically completed in all respects with exceptions noted below. The system/sub-system can be taken up for checking and preparation of checklist.

SYSTEM NO.

SYSTEM DESCRIPTION:

EXCEPTIONS:

SIGNATURE DATE

CONTRACTOR'S CONSTRUCTION:

CO-ORDINATOR

The system is ready/ not ready for Check listing

OWNER/ PMC:

F O R M A T - II

CHECKLIST

PROJECT:_____CUSTOMER:_____UINT:_____

SYSTEM/SUB-SYSTEM_____

CHECKLIST TYPE **PRELIMINARY/FINAL**

SL.NO.	CHECKLIST ITEMS	REMARKS

SIGNATURE DATE

PMC :

OWNER:

F O R M A T - III

READY FOR PRE-COMMISSIONING CERTIFICATE

PROJECT:_____CUSTOMER:_____ UNIT:_____

SYSTEM/SUB-SYSTEM_____

This is to certify that the following Plant/system/sub- system as detailed below is completely installed and all the Checklist points are carried out except for minor details as given in the attached list.

DESCRIPTION ON PLANT/SECTION/SUB-SECTION_____

SIGNATURE DATE

CONTRACTOR'S CONSTRUCTION
CO-ORDINATOR:

CONTRACTOR'S COMMISSIONING
CO-ORDINATOR

The system is ready/ not ready for pre-commissioning

PMC :
OWNER:

F O R M A T - IV

READY FOR COMMISSIONING CERTIFICATE

PROJECT:_____CUSTOMER:_____ UNIT:_____

SYSTEM/SUB-SYSTEM_____

This is to certify that all the necessary pre-commissioning activities for the system/sub-system as detailed below have been completed and the system/sub-system is ready for commissioning except for the minor details as given below which will not effect the commissioning trial runs.

DESCRIPTION OF SYSTEM/SUB-SYSTEM_____

SIGNATURE DATE

CONTRACTOR'S COMMISSIONING:

CO-ORDINATOR SIGNATURE DATE

PMC: OWNER:

F O R M A T - V

COMPLETION OF COMMISSIONING CERTIFICATE

PROJECT:_____CUSTOMER:_____ UNIT:_____

SYSTEM/SUB-SYSTEM_____

This is to certify that the system/sub-system as detailed below has been successfully commissioned and is under operational control of Client's Production department. The minor items, which will not effect the normal operation of the system/sub-system, are given in the attached list.

DESCRIPTION OF SYSTEM/SUB-SYSTEM_____

SIGNATURE DATE

CONTRACTOR'S COMMISSIONING:
CO-ORDINATOR SIGNATURE DATE

PMC: OWNER:

F O R M A T - V

COMPLETION OF COMMISSIONING CERTIFICATE

PROJECT:_____CUSTOMER:_____ UNIT:_____

SYSTEM/SUB-SYSTEM_____

This is to certify that the system/sub-system as detailed below has been successfully commissioned and is under operational control of Client's Production department. The minor items, which will not effect the normal operation of the system/sub-system, are given in the attached list.

DESCRIPTION OF SYSTEM/SUB-SYSTEM_____

SIGNATURE DATE

CONTRACTOR'S COMMISSIONING:
CO-ORDINATOR SIGNATURE DATE

PMC: OWNER:

Rev. : 0
Edition : 1

SPECIFICATION
FOR
HEALTH, SAFETY
AND
ENVIRONMENT (HSE)
MANAGEMENT

SPECIFICATION NO.: MEC/S/05/21/65

(OIL & GAS SBU)
MECON LIMITED
DELHI 110 092

CONTENTS

SL. NO.	DESCRIPTION
1.0	SCOPE
2.0	REFERENCES
3.0	REQUIREMENT OF HEALTH, SAFETY & ENVIRONMENT (HSE) MANAGEMENT SYSTEM TO BE COMPLETED BY BIDDERS.
4.0	DETAILS OF HSE MANAGEMENT SYSTEM BY CONTRACTOR
5.0	RECORDS
	ANNEXURE-A
	ANNEXURE-B
	ANNEXURE-C
	ANNEXURE-D
	ANNEXURE-E

PREPARED BY:	CHECKED BY:	APPROVED BY:	ISSUE DATE :
(Shalini Singh)	(Sunil Kumar)	(A.K. Johri)	Feb. 2009

1.0 SCOPE

This specification establishes the Healthy, Safety and Environment (HSE) management requirement to be complied with by the Contractors during construction.

This specification is not intended to replace the necessary professional judgement needed to design & implement an effective HSE system for construction activities and the contractor is expected to exceed requirements given in this specification.

Requirement stipulated in this specification shall supplement the requirement of HSE management given in relevant Act (S)/ legislations. General Condition of Contract (GCC) Special Condition of Contract (SCC) and Job Specifications. Where different documents stipulate different requirements, the most stringent shall be adopted.

2.0 REFERENCES

This document should be read in conjunction with following:

- General Conditions of Contract (GCC)
- Special Conditions of Contract (SCC)
- Building and other construction workers (regulation of employment and condition of service) Act, 1996
- Job Specifications
- Relevant IS Codes (refer Annexure-A)
- Reporting Formats (refer Annexure-B)
- Statutory requirements

3.0 REQUIREMENT OF HEALTH, SAFETY & ENVIRONMENT (HSE) MANAGEMENT SYSTEM TO BE COMPLETED BY BIDDERS.

3.1 Management Responsibility

3.1.1 The Contract should have a document HSE policy to cover commitment of the organization to ensure health, safety and environment aspects in their line of operations

3.1.2 The HSE management system of the Contractor shall cover HSE requirement including but not limited to what specified under clause 1.0 & 2.0 mentioned above

3.1.3 Contractor shall be fully responsible for planning and implementing HSE requirement to the satisfaction of the company. Contractor as a minimum requirement shall designate/deploy the following to co-ordinate the above:

No. Of workers deployed		
Up to 250	-	Designate one safety supervisor who will guide the workers from time to time, as well as impart training basic guidelines at least weekly once.

Above 250 & upto 500	-	Deploy one qualified and experienced safety Engineer/ Officer who will guide the workers from time to time as well as impart basic guideline & training at least weekly once. He / She shall possess a recognized Degree in any branch of engineering or technology or architecture and had a post qualification construction experience of minimum two years or possess a recognized Diploma in any branch of engineering or technology or Graduate in Science stream and had a post qualification construction experience of minimum five years.
Above 500 (for every 500 or less)	-	One additional safety engineer/Officer whose function will be as mentioned above

Contractor shall indemnify and hold harmless OWNER/ MECON & their representative's from any and all liabilities arising out of non fulfillment of HSE requirements.

Above is the minimum requirement and the Contractor shall ensure physical presence of a safety personnel at each place where Hot work permit is required. No work shall be started at site until above safety personnel are physically present at site. The contractor shall submit a safety organogram clearly indicating the lines of responsibility and reporting system. He shall furnish Bio- Data/Resume/Curriculum Vitae of the safety personnel he intends to mobilize, at least 1 month before the intended mobilization, for MECON/Owner's approval.

3.1.4 The Contractor shall ensure that the Health, Safety and Environment (HSE) requirements are clearly understood & faithfully implemented at all levels, at each and every site/ work place.

3.1.5 The Contractor shall promote and develop consciousness for Health, Safety and Environment among all personnel working for the Contractor. Regular awareness programs and fabrication shop/work site meeting shall be arranged on HSE activities to cover hazards involved in various operations during construction.

3.1.6 Arrange suitable first aid measures such as First Aid Box, trained personnel to give First Aid, Stand by Ambulance or Vehicle and install fire protection measures such as: adequate number of steel buckets with sand and water and adequate fire extinguishers to the satisfaction of OWNER/ MECON. In case the number of workers exceeds 500, the Contractor shall position an ambulance /vehicle on full time basis very close to the worksite.

3.1.7 The Contractor shall evolve a comprehensive planned and documented system for implementation and monitoring of the HSE requirements. This shall submitted to

OWNER & MECON for approval well in advance, prior to start of work. The monitoring for implementation shall be done by regular inspection and compliance to the observations thereof. The Contractor shall get similar HSE requirements implemented at his sub-contractor (s) work site/ Office. However, compliance of HSE requirement shall be the sole responsibility of the Contractor. Any review/ approval by OWNER/ MECON shall not absolve the Contractor of his responsibility/ liability in relation to all HSE requirements.

3.1.8 Non-Conformance on HSE by the Contractor (including his Sub- contractors) as brought out during review/ audit by MECON/ OWNER representative shall be resolved forthwith by Contractor. Compliance report shall be possibility submitted to MECON/ OWNER at the earliest.

3.1.9 The Contractor shall ensure participation of his Resident Engineer/Site-in-Charge in the Safety Committee/HSE Committee meetings arranged by OWNER/ MECON. The compliance of any observation shall be arranged urgently. Contractor shall assist OWNER/MECON to achieve the targets set by them on HSE during the project implementation.

The contractor shall ensure that his staff members & workers (permanent as well casual) shall not be in a state of intoxication during working hours and shall abide by any law relating to consumption & possession of intoxicating drinks or drugs in force. Awareness about local laws on this issue shall form part of the Induction Training.

The contractor shall ensure that all personnel working for him comply with No-smoking requirements of the owner as notified from time to time. Cigarettes, lighters, auto ignition tools or appliances shall not be allowed inside the plant complex. Smoking shall be permitted only inside smoking booths expressly designated & authorized by the Owner/MECON.

3.1.10 The Contractor shall adhere consistently to all provisions of HSE requirements. In case of non- compliance or continuous failure in implementation of any of HSE provisions; OWNER/ MECON may impose stoppage of work without any Cost & Time implication to Owner and/or impose a suitable penalty for non-compliance with a notice of suitable period, upto a cumulative limit of 1.0% (one percent) of Contract value with a ceiling of Rs. 10 lakhs.

0.2% (Zero decimal two per cent) of the contract value for LSTK, EPC, EPCC or Package contracts with an overall ceiling of Rs. 1,00,00,000/- (Rupees one crore).

S. No.	Violation or HSE norms	Penalty Amount
1.	For not using personal protective equipment (Helmet, Shoes, Goggles, Gloves, Full body harness, Face shield, Boiler suit, etc.)	Rs. 250/- per day / item / person
2.	Working without Work Permit / Clearance	Rs.5,000/- per occasion

S. No.	Violation or HSE norms	Penalty Amount
3.	Unsafe electrical practices (not installing ELCB, using poor joints of cables, using naked wire without top plug into socket, laying wire / cables on the roads, electrical jobs by incompetent person, etc.)	Rs.3,000/- per item per day.
4.	Working at height without full body harness, using non-standard / rejected scaffolding and not arranging fall protection arrangement as required like Safety Nets.	Rs.1,000/ per case per day.
5.	Unsafe handling of compressed gas cylinders (No trolley, jubilee clips double gauge regulator, improper storage / handling).	Rs. 100/- per item per day
6.	Use of domestic LPG for cutting purpose.	Rs.1,000/- per occasion
7.	No fencing / barricading of excavated areas.	Rs.1,000/- per occasion
8.	Not providing shoring / strutting / proper slope and not keeping the excavated earth at least 1.5 M away from excavated area.	Rs.5,000/- per occasion
9.	Non display of caution boards, list of hospitals, emergency services available at work locations.	Rs.500/- per occasion
10.	Traffic rules violations like over speeding of vehicles, rash driving, wrong parking, not using seat belts, vehicles not fitted with reverse warning alarms.	Rs.1,000/- per occasion
11.	Absence of Contractor's top most executive at site in the safety meetings whenever called by MECON / Owner	Rs.1,000/- per occasion
12.	Failure to maintain safety records by Contractor Safety personnel.	Rs.1,000/- per month.
13.	Failure to conduct daily safety site inspection, HSE meeting and HSE audit at predefined frequencies.	Rs.1,000/- per occasion
14.	Failure to submit the monthly HSE report by 5th of subsequent month to Engineer-in-Charge.	Rs. 1,000/- per occasion and Rs. 100/- per day for further delay.
15.	Poor House Keeping	Rs.1,000/- per occasion
16.	Failure to report & follow up accident (including Near Miss) reporting system.	Rs. 10,000/- per occasion

S. No.	Violation or HSE norms	Penalty Amount
17.	Degradation of environment (not confining toxic spills oil / lubricants onto ground)	Rs.1,000/- per occasion
18.	Not medically examining the workers before allowing them to work at height, not providing earmuffs while allowing them to work in noise polluted areas, made them to work in air polluted areas without respiratory protective devices, etc.	Rs.1,000/- per occasion
19.	Violation of any other safety condition as per job HSE plan, work permit and HSE conditions of contract (using crowbar on cable trenches, improper welding booth, not keeping fire extinguisher ready at hot work site, unsafe rigging practices, non-availability of First-Aid box, etc.)	Rs.1,000/- per occasion
20.	Any violation not covered above.	To be decided by MECON / Owner

This penalty shall be in addition to all other penalties specified elsewhere in the contract. The decision of imposing stoppage of work, its extent & monitory penalty shall rest with MECON/OWNER & binding on the Contractor.

3.1.11 All fatal accidents and other personnel accidents shall be investigated by a team of Contractor's senior personnel for root cause and recommend corrective and preventive actions. Findings shall documented and suitable actions taken to avoid recurrences shall be communicated to OWNER / MECON. OWNER / MECON shall have the liberty to independently investigate such occurrences and Contractor shall extend all necessary help and co- operation in this regard. MECON / Owner shall have to right to share the content of this report with the outside world.

3.2 **House Keeping**

3.2.1 Contractor shall ensure that a high degree of house keeping is maintained and shall ensure the followings:

a. All surplus earth and debris are removed/disposed off from the working site to identified location (s).

b. Unused/Surplus Cables Steel items and steel scrapling scattered at different places within the working areas are removed to identified location (s).

c. All wooden scrap, empty wooden cable drums and other combustible packing materials shall be removed from work place to identified location(s).

The Contractor shall ensure that all their staff, workers and visitors including their sub- contractor(s) hav e been issued (records t o be kept) & wear appropriate PPEs like nape strap type safety helmets preferably with head & sw eat band w ith ¾" cot ton chin st rap (made of industrial HDPE), safety shoes with steel toe cap and antiskid sole, full body harness (C∈ marked and conforming t o EN361) , pr otective g oggles, g loves, ear m uffs, respiratory protective dev ices, et c. All t hese g adgets shall conform to applicable IS Specifications / C∈ or other applicable international standards.

Owner may issue a com prehensive color scheme for helmets to be used by various agencies. The Contractor shall f ollow t he schem e issued by t he owner. All Safety / Fire personnel shall pr eferably wear red colour helmet so that workmen can approach them for guidance during emergencies.

For shot blasting, the usag e of pr otective face shield and helm ets, g auntlet and protective clothing is mandatory.

For offshore jobs/contracts, contractor shall provide PPEs (new) to MECON & Owner's per sonnel, at his (contractor's) cost . All personnel shall wear life jacket at all time.

An indicative list of HSE standards/codes is given under Appendix-A.

The cont ractor shall issue heig ht per mit f or working at height after verifying and certifying the checkpoints as specified in the attached permit (Format No. HSE-6). He shall also undertake to ensur e com pliance t o t he condit ions of the permit during the currency of the per mit including adherence to personal protective equipments.

The per mit shall be issued init ially f or one w eek or expected duration of an activity and ex tended f urther f or t he balance dur ation. T his per mit shall be applicable in areas w here specific clearance from Owner's operation Deptt. / Safety Deptt. is not req uired. MECON field Engineers / Safety Officers / Area Coordinators may verify and count er sig n t his per mit (as an ev idence of verification) during the execution of the job.

In case w ork is under taken w ithout t aking suf ficient pr ecautions as g iven in the per mit, MECON Eng ineers m ay cancel t he per mit and st op the work till satisfactory com pliance is ar ranged. Contractors ar e expected to m aintain a register for issuance of per mit and ex tensions t hereof including pr eserving the used permits for verification during audits etc.

Contractor shall arrange (at his cost) and ensure use of Fall Arrester Systems by his workers. Fall arresters are to be used w hile climbing / descending tall structures. These arresters should lock aut omatically ag ainst the anchor age line, restricting free fall of the user. The device is to be provided with a double security opening system to ensure safe attachment or release of the user at

any point of rope. In order to avoid shock, the system should be capable of keeping the person in vertical position in case of a fall.

Contractor shall ensure that Full body harnesses conforming EN361 and having authorized CC marking is used by all personnel while working at height. The lanyards and life lines should have enough tensile strength to take the load of the worker in case of a fall. One end of the lanyard shall be firmly tied with the harnesses and the other end with life line. The harness should be capable of keeping the workman vertical in case of a fall, enabling him to rescue himself.

Contractor shall provide Roof Top Walk Ladders for carrying out activities on sloping roofs in order to reduce the chances of slippages and falls.

c) Contractor shall ensure that a proper Safety Net System shall be used at appropriate locations. The safety net shall be located not more than 30 feet (9.0 metres) below the working surface at site to arrest or to reduce the consequences of possible fall of persons working at different heights.

d) Contractor shall ensure that flash back arrestors conforming to BS:6158 or equivalent are installed on all gas cylinders as well as at the torch end of the gas hose, while in use. All cylinders shall be mounted on trolleys and provided with a closing key. The burner and the hose placed downstream of pressure reducer shall be equipped with Flash Back Arrester / Non Return Valve device. The hoses for acetylene and oxygen cylinders must be of different colours. Their connections to cylinders and burners shall be made with a safety collar. At end of work, the cylinders in use shall be closed and hoses depressurized. All welding machines shall have effective earthing. In order to help maintain good housekeeping, and to reduce fire hazard, live electrode bits shall be contained safely and shall not be thrown directly on the ground.

e) The Contractor shall assign to his workmen, tasks commensurate with their qualification, experience and state of health for driving of vehicles, handling and erections of materials and equipment's. All lifting equipments shall be tested certified for its capacity before use. Adequate and suitable lighting at every work place and approach there to shall be provided by the contractor before starting the actual work/ operation at night.

Contractor shall ensure installation of Safe Load Indicator (SLI) on all cranes (while in use) to minimize overloading risk. SLI shall have capability to continuously monitor and display the load on the hook, and automatically compare it with the rated crane capacity at the operating condition of the crane. The system shall also provide visual and audible warnings at set capacity levels to alert the operator in case of violations.

The contractor shall be responsible for safe operations of different equipments mobilized and used by him at the workplace like transport

vehicles, engines, cranes, mobile ladders, scaffoldings, work tools, etc.

f) Hazardous and/or toxic material such as solvent coating or thinners shall be stored in appropriate containers.

g) All hazardous materials shall be labeled with the name of the materials, the hazards associated with its use and necessary precautions to be taken.

The work place shall be checked prior to start of activities to identify the location, type and condition of any asbestos materials which could be disturbed during the work. In case asbestos material is detected, usage of appropriate PPEs by all personnel shall be ensured and the matter shall be reported immediately to MECON / Owner.

h) Contractor shall ensure that during the performance of the work all hazards to the health of personnel have been identified assessed and eliminated.

i) Chemical spills shall be contained & cleaned up immediately to prevent further contamination.

j) All personnel exposed to physical agents such as ionizing or non-ionizing radiation ultraviolet rays or similar other physical agents shall be provided with adequate shielding or protection commensurate with type of exposure involved. For ionizing radiation, requirements of Bhabha Atomic Research Centre (BARC)/ Atomic Energy Regulatory Board (AERB) shall be followed.

k) Where contract or exposure of hazardous materials could exceed limits or could otherwise have harmful affects, appropriate personal protective equipment's such as gloves, goggles, aprons, chemical resistant clothing and respirator shall be used.

l) Contractor shall ensure the following facilities at work sites:

I) A Crèche where 10 or more female workers are having children below the age of 6 years.

II) Reasonable Canteen facilities are made available at appropriate location depending upon site conditions.

m) Suitable facilities for toilet, drinking water, proper lighting shall be provided at site and labor camps, commensurate with applicable Laws/Legislation.

n) Contractor shall ensure storage and utilization methodology of material that are not detrimental to the environment. Wherever required Contractor shall ensure that only the environment friendly material are selected.

Emphasize on recycling of waste materials such as metals, plastics, glass, paper, oil & solvents. The waste that can not be minimized, reused or

recovered shall be stored and disposed of safely. In no way, toxic spills shall be allowed to percolate into the ground. The contractor shall not use the empty areas for dumping the wastes.

o) All person deployed at site shall be knowledgeable of and comply with the environmental laws, rules & regulation relating to the hazardous materials substance and wastes. Contractor shall not dump, release or otherwise discharge or dispose of any such materials without the authorization of OWNER/ MECON.

Suitable scaffoldings shall be provided to workmen for all works that cannot be safely done from the ground or from solid construction except such short period work that can be safely done using ladders. When a ladder is used, an extra workman shall be engaged for holding the ladder.

The contractor shall ensure that the scaffolds used during construction activities shall be strong enough to take the designed load. Owner / MECON reserves the right to ask the contractor to submit certification and or design calculations from his Engineering regarding load carrying capacity of the scaffoldings.

All scaffolds shall be inspected by a Scaffolding Inspector of the contractor. He shall paste a GREEN tag on each scaffold found safe and a RED tag on each scaffold found unsafe. Scaffolds with GREEN tag only shall be permitted to be used and RED ones shall immediately be removed from the site.

All electrical installations / connections shall be carried out as per the provisions of latest revision of following codes/ standards, in addition to the requirements of Statutory Authorities and IE / applicable international rules & regulations:

- OISO SID 173 : Fire prevention & protection system for electrical installations
- SP 30 (BIS) : National Electric Code

All electrical installations shall be approved by the concerned statutory authorities.

- The contractor shall meet the following requirements:

  i) Ensure that electrical systems and equipment including tools & tackles used during construction phase are properly selected, installed, used and maintained as per provisions of the latest revision of the Indian Electrical / applicable international regulations.

  ii) Shall deploy qualified & licensed electricians for proper & safe installation and for regular inspection of construction power

distribution system / points including their earthing. A copy of the license shall be submitted to MECON / Owner for records. Availability of at least one competent licensed electrician shall be ensured at site round the clock to attend to the normal / emergency jobs.

iii) All switchboards / welding machines shall be kept in well-ventilated & covered shed. The shed shall be elevated to avoid water logging. No flammable materials shall be used for constructing the shed. Also flammable materials shall not be stored in and around electrical equipment / switchboard. Adequate clearances and operational space shall be provided around the equipment.

iv) Fire extinguishers and insulating mats shall be provided in all power distribution centers.

v) Temporary electrical equipment shall not be employed in hazardous area without obtaining safety permit.

vi) Proper house keeping shall be done around the electrical installations.

vii) All temporary installations shall be tested before energising, to ensure proper earthing, bonding, suitability of protection system, adequacy of feeders/cables etc.

viii) All welders shall use hand gloves irrespective of holder voltage.

ix) Multilingual (Hindi, English and local language) caution boards, shock treatment charts and instruction plate containing location of isolation point for incoming supply, name & telephone No. of contact person in emergency shall be provided in substations and near all distribution boards / local panels.

x) Operation of earth leakage device shall be checked regularly by temporarily connecting series test lamp (2 bulbs of equal rating connected in series) between phase and earth.

xi) Regular inspection of all installations (at least once in a month)

- The following features shall also be ensured for all electrical installations during construction phase by the contractor:

i) Each installation shall have a main switch with a protective device, installed in an enclosure adjacent to the metering point. The operating height of the main switch shall not exceed 1.5 M. The main switch shall be connected to the point of supply by means of armoured cable.

ii) The outgoing feeders shall be double or triple pole switches with fuses / MCBs. Loads in a three phase circuit shall be balanced as far as

possible and load on neutral should not exceed 20% of load in the phase.

iii) The installation shall be adequately protected against overload, short circuit and earth leakage by the use of suitable protective devices. Fuses wherever used shall be HRC type. Use of rewirable fuses shall be strictly prohibited. The earth leakage device shall have an operating current not exceeding 30 mA.

iv) All connections to the hand tools / welding receptacles shall be taken through proper switches, sockets and plugs.

v) All single phase sockets shall be minimum 3 pin type only. All unused sockets shall be provided with socket caps.

vi) Only 3 core (P+N+E) overall sheathed flexible cables with minimum conductor size of 1.5 mm^2 copper shall be used for all single phase hand tools.

vii) Only metallic distribution boxes with double earthing shall be used at site. No wooden boxes shall be used.

viii) All power cables shall be terminated with compression type cable glands. Tinned copper lugs shall be used for multistrand wires / cables.

ix) Cables shall be free from any insulation damage.

x) Minimum depth of cable trench shall be 750 mm for MV & control cables and 900 mm for HV cables. These cables shall be laid over a sand layer and covered with sand, brick & soil for ensuring mechanical protection. Cables shall not be laid in waterlogged area as far as practicable. Cable route markers shall be provided at every 25 M of buried trench route. When laid above ground, cables shall be properly cleated or supported on rigid poles of at least 2 M high. Minimum head clearance of 6 meters shall be provided at road crossings.

xi) Under ground road crossings for cables shall be avoided to the extent feasible. In any case no under ground power cable shall be allowed to cross the roads without pipe sleeve.

xii) All cable joints shall be done with proper jointing kit. No taped / temporary joints shall be used.

xiii) An independent earthing facility should preferably be established within the temporary installation premises. All appliances and

equipment shall be adequately earthed. In case of armoured cables, the armour shall be bonded to the earthing system.

xiv) All cables and wire rope used for earth connections shall be terminated through tinned copper lugs.

xv) In case of local earthing, earth electrodes shall be buried near the supply point and earth continuity wire shall be connected to local earth plate for further distribution to various appliances. All insulated wires for earth connection shall have insulation of green colour.

xvi) Separate core shall be provided for neutral. Earth / Structures shall not be used as a neutral in any case.

xvii) ON/OFF position of all switches shall be clearly designated / painted for easy isolation in emergency.

The contractor shall identify all operations that can adversely affect the health of its workers and issue & implement mitigation measures.

For surface cleaning operations, sand blasting shall not be permitted even if not explicitly stated elsewhere in the contract.

To eliminate radiation hazard, Tungsten electrodes used for Gas Tungsten Arc Welding shall not contain Thorium.

Appropriate respiratory protective devices shall be used to protect workmen from inhalation of air borne contaminants like silica, asbestos, gases, fumes, etc.

Workmen shall be made aware of correct methods for lifting, carrying, pushing & pulling of heavy loads. Wherever possible, manual handling shall be replaced by mechanical lifting equipments.

For jobs like drilling / demolishing / dismantling where noise pollution exceeds the specified limit of 85 decibels, ear muffs shall be provided to the workers.

To avoid upper limb disorders and backaches, Display Screen Equipments' workplace stations shall be carefully designed & used with proper sitting postures. Power driven hand-held tools shall be maintained in good working condition to minimize their vibrating effects and personnel using these tools shall be taught how to operate them safely & how to maintain good circulation in hands.

The contractor shall arrange health check up for all the workers at the time of induction. Health check may have to be repeated if the nature of duty assigned to him is changed necessitating health check or doubt arises about his wellness. MECON / Owner reserve the right to ask the contractor to submit test reports.

Weather Protection

Contractor shall take appropriate measures to protect workers from severe storms, solar radiations, poisonous gases, dust, etc. by ensuring proper usage of PPEs like Sun glasses, Sun screen lotions, respirators, dust masks, etc. and rearranging / planning the construction activities to suit the weather conditions.

Communication

All persons deployed at the work site shall have access to effective means of communication so that any untoward incident can be reported immediately and assistance sought by them.

All health & safety information shall be communicated in a simple & clear language easily understood by the local workforce.

Unsuitable Land Conditions

Contractor shall take appropriate measures and necessary work permits / clearances if work is to be done in or around marshy areas, river crossings, mountains, monuments, etc.

Under Water Inspection

Contractor shall ensure that boats and other means used for transportation, surveying & investigation works shall be certified seaworthy by a recognized classification society. It shall be equipped with all life saving devices like life jackets, adequate fire protection arrangements and shall posses communication facilities like cellular phones, wireless, walkie-talkie. All divers used for seabed surveys, underwater inspections shall have required authorized license, suitable life saving kit. Number of hours of work by divers shall be limited as per regulations. MECON / Owner shall have the right to inspect the boat and scrutinize documents in this regard.

TOOL BOX MEETING (TBM)

Contractor shall conduct daily TBM with workers prior to start of work and shall maintain proper record of the meeting. A suggested format is given below. The TBM is to be conducted by the immediate supervisor of the workers.

TOOLBOX MEETING RECORDING SHEET

Date & Time		
Subject		
Presenter		
Hazards involved		
Precautions to be taken		
Worker's Name	Signature	Section
Remarks, if any		

The topics during TBM shall include

- Hazards related to work assigned on that day and precautions to be taken.
- Any forthcoming HSE hazards / events / instruction / orders, etc.

The above record can be kept in local language, which workers can read. These records shall be made available to MECON / Owner whenever demanded.

TRAINING

Contractor shall ensure that all his personnel possess appropriate training to carry out the assigned job safely. The training should be imparted in a language understood by them and should specifically be trained about

- Potential hazards to which they may be exposed at their workplace
- Measures available for prevention and elimination of these hazards

The topics during training shall cover, at the minimum;

- Education about hazards and precautions required
- Emergency and evacuation plan
- HSE requirements
- Fire fighting and First-Aid
- Use of PPEs
- Local laws on intoxicating drinks, drugs, smoking in force

Records of the training shall be kept and submitted to MECON / Owner whenever demanded.

For offshore and jetty jobs, contractor shall ensure that all personnel deployed have undergone a structured sea survival training including use of lifeboats, basket landing, use of radio communication etc. from an agency acceptable to Owner / MECON.

INSPECTION

The contractor shall carryout daily HSE inspection and record observations at a central location. These inspection records shall be freely accessible to Owner / MECON representatives. The contractor shall also assist Owner / MECON representatives during the HSE inspections conducted by them.

ADDITIONAL SAFETY REQUIREMENTS FOR WORKING INSIDE A RUNNING PLANT

As a minimum, the contractor shall ensure adherence to following safety requirements while working in or in the close vicinity of an operating plant :

a) Contractor shall obtain permits for Hot work, Cold work, Excavation and Confined Space from Owner in the prescribed format.

b) The contractor shall monitor, record and compile list of his workers entering the operational plant/unit each day and ensure & record their return after completing the job.

c) Contractor's workers and staff members shall use designated entrances and proceed by designated routes to work areas only assigned to them. The workers shall not be allowed to enter units' area, tanks area, pump rooms, etc. without work authorization permit.

d) Work activities shall be planned in such a way so as to minimize the disruption of other activities being carried out in an operational plant / unit and activities of other contractors.

e) The contractor shall submit a list of all chemicals / toxic substances that are intended to be used at site and shall take prior approval of the Owner.

f) Specific training on working in a hydrocarbon plant shall be imparted to the work force and mock drills shall be carried out for Rescue operations / First-Aid measures.

g) Proper barricading / cordoning of the operational units / plants shall be done before starting the construction activities. No unauthorized person shall be allowed to trespass. The height and overall design of the barricading structure shall be finalized in consultation with the Owner and shall be got approved from the Owner.

h) Care shall be taken to prevent hitting underground facilities such as electrical cables, hydrocarbon piping during execution of work.

i) Barricading with water curtain shall be arranged in specific/critical areas where hydrocarbon vapors are likely to be present such as near horton spheres or tanks. Positioning of fire tenders (from owner) shall also be ensured during execution of critical activities.

j) Emergency evacuation plan shall be worked out and all workmen shall be apprised about evacuation routes. Mock drill operations may also be conducted.

k) Flammable gas test shall be conducted prior to any hot work using appropriate measuring instruments. Sewers, drains, vents or any other gas escaping points shall be covered with flame retardant tarpaulin.

l) Respiratory devices shall be kept handy while working in confined zones where there is a danger of inhalation of poisonous gases. Constant monitoring of presence of Gas / Hydrocarbon shall be done.

m) Clearance shall be obtained from all parties before starting hot tapping, patchwork on live lines and work on corroded tank roof.

n) Positive isolation of line/equipment by blinding for welding/cutting/grinding shall be done. Closing of valve will not be considered sufficient for isolation.

o) Welding spatters shall be contained properly and in no case shall be allowed to fall on the ground containing oil. Similar care shall be taken during cutting operations.

p) The vehicles, cranes, engines, etc. shall be fitted with spark arresters on the exhaust pipe and got it approved from Safety Department of the Owner.

q) Plant air should not be used to clean any part of the body or clothing or use to blow off dirt on the floor.

r) Gas detectors should be installed in gas leakage prone areas as per requirement of Owner's plant operation personnel.

s) An experienced full time safety personnel shall be exclusively deployed to monitor safety aspects in running plants.

HSE PROMOTION

The contractor shall encourage his workforce to promote HSE efforts at workplace by way of organizing workshops / seminars / training programmes, celebrating HSE awareness weeks & National Safety Day, conducting quizzes & essay competitions, distributing pamphlets, posters & material on HSE, providing incentives for maintaining good HSE practices and granting bonus for completing the job without any lost time accident.

4.0 DETAILS OF HSE MANAGEMENT SYSTEM BY CONTRACTOR

4.1 On Award of Contract

The Contractor shall prior to start of work submit his Health. Safety and Environment Manual of procedure and HSE Plans for approval by OWNER/MECON. The Contractor shall participate in the pre-start meeting with OWNER/MECON to finalize HSE plans including the following.

- Job procedure to be followed by Contractor for activities covering Handling of equipment's, Scaffolding, Electric Installation, describing the risks involved, actions to be taken and methodology for monitoring each.

- Organizations structure alongwith responsibility and authority records/ reports etc. on HSE activities.

4.2 During job execution

4.2.1 Implement approved Health, Safety and Environment management procedure including but not limited to as brought our under para 3.0. Contractor shall also ensure to:

- Arrange workmen compensation insurance, registration under ESI Act, third party liability insurance etc. as applicable.

- Arrange all HSE permits before start of activities (as applicable) like her work, confined space, work at heights, storage of Chemicals/explosives materials and its use and implement all precautions mentioned therein

- Submit timely the completed check list on HSE activities, Monthly HSE report, accident report, investigation report, etc. as per OWNER/MECON requirements. Compliance of instructions on HSE shall be done by Contractor and informed urgently to OWNER/MECON.

- Ensure that resident Engineers/Site-In-Charge of the Contractor shall amend all the Safety Committee/HSE meeting arranged by OWNER/ MECON only in case of his absence from site, a seconds senior most person shall be nominated by him in advance and communicated to OWNER/MECON.

- Display at site office and work locations caution boards, list of hospitals for emergency services available.

- Provided posters, banners, for safe working to promote safety consciousness

- Carryout audits/inspection at sub Contractor work as per approved HSE documents & submit the reports for OWNER/MECON review.

- Assist in HSE audits by OWNER/ MECON and submit compliance report.
- Generate & submit HSE records/ reports as per HSE Plan.
- Appraise OWNER/MECON on HSE activities at site.

5.0 RECORDS

At the minimum, the contractor shall maintain/ submit HSE records in the following reporting formats:

1.	Monthly HSE Checklist cum compliance report	HSE-1
2.	Accident / Incident Report	HSE-2
3.	Supplementary Accident / Incident Investigation report	HSE-3
4.	Near Miss Incident Report	HSE-4
5.	Monthly HSE Report	HSE-5
6.	Permit for working at height	HSE-6
7.	Permit for working in confined space	HSE-7
8.	Permit for radiation work	HSE-8
9.	Permit for demolishing / dismantling	HSE-9

ANNEXURE-A

A. I.S. CODES ON HSE

SP:53	Safety code for the use, Care and protection of hand operated tools.
IS: 818	Code of pr actice f or saf ety and healt h r equirements in elect ric and g as welding and cutting operations
IS: 1179	Eye and Face precautions during welding, equipment etc.
IS: 1860	Safety requirements for use, care and protection of abrasive grinding wheels.
IS: 1989(Part-I & II)	Leather safety boots and shoes
IS: 2925	Industrial Safety Helmets
IS: 3016	Code of practice for fire safety precautions in welding and cutting operations.
IS: 3043	Code of practice for earthing.
IS: 3764	Code of safety for excavation work
IS: 3786	Methods for computation of frequency and severity rates for industrial injuries and classification of industrial accidents.
IS: 3996	Safety Code of scaffolds and ladders.
IS: 4082	Recommendation on st acking and st orage of const ruction m aterials and components at site.
IS: 4770	Rubber gloves for electrical purposes
IS: 5121	Safety code for piling and other deep foundations
IS: 5216 (Part-I)	Recommendations on Safety procedures and practices in electrical works
IS: 5557	Industrial and Safety rubber lined boots.
IS: 5983	Eye protectors
IS:6519	Selection, care and repair of Safety footwear
IS: 6994 (Part-I)	Industrial Safety Gloves (Leather & Cotton Gloves)
IS: 7293	Safety Code for working with construction Machinery

IS: 8519	Guide for selection of industrial safety equipment for body protection
IS: 9167	Ear protectors
IS: 11006	Flash back arrestor (Flame arrestor)
IS:11016	General and safety requirements for machine tools and their operation
IS: 11057	Specification for Industrial safety nets
IS: 11226	Leather safety footwear having direct moulded rubber sole
IS: 11972	Code of practice for safety precaution to be taken when entering a sewerage system
IS: 13367	Code of practice-safe use of cranes
IS: 13416	Recommendations for preventive measures against hazards at working place

B. INTERNATIONAL STANDARDS ON HSE

Safety Glasses	:	ANSI Z 87.1, ANSI ZZ 87.1, AS 1337, BS 2092, BS 1542, BS 679, DIN 4646 / 58211
Safety Shoes	:	ANSI Z 41.1, AS 2210, EN 345
Hand Gloves	:	BS 1651
Ear Muffs	:	BS 6344, ANSI S 31.9
Hard Hat	:	ANSI Z 89.1 / 89.2, AS 1808, BS 5240, DIN 4840
Goggles	:	ANSI Z 87.1
Face Shield	:	ANSI Z 89.1
Breathing Apparatus	:	BS 4667, NIOSH
Welding & Cutting	:	ANSI Z 49.1
Safe handling of compressed Gases in cylinders	:	P-1 (Compressed Gas Association 1235 Jefferson Davis Highway, Arlington VA 22202 – USA)

ANNEXURE-B

DETAILS OF FIRST AID BOX

SL. NO	DESCRIPTION	*QUANTITY*
1.	Small size Roller Bandages, 1 inch wide (Finger Dressing small)	6 Pcs.
2.	Medium size Roller Bandages, 2 inch wide (Hand and Foot Dressing)	6 Pcs.
3.	Large size Roller Bandages, 4 inch wide (Body Dressing Large)	6 Pcs.
4.	Large size Burn Dressing (Burn Dressing Large)	4 Pkts.
5.	Cotton wool (20 gms packing)	4 Pkts.
6.	Antiseptic Solution Dettol (100 ml.) or Savlon	1 Bottle
7.	Mercurochrome Solution (100 ml.) 2% in water	1 Bottle
8.	Ammonia Solution (20 ml.)	1 Bottle
9.	A Pair of Scrissors	1 Piece
10.	Adhesive Plaster (1.25 cm x 5 m)	1Spool
11.	Eye pads in Separate Sealed Packet	4 Pcs.
12.	Tourniqut	1 No.
13.	Safety Pins	1 Dozen
14.	Tinc. Iodine / Betadin (100 ml.)	1 Bottles
15.	Ointment for burns (Burnol 20 gms.)	1 Bottole
16.	Polythene Wash cup for washing eyes	1 No.
17.	Potassium Permanganate (20 gms.)	1 Pkt.
18.	Tinc. Benzoine (100 ml.)	1 Bottole
19.	Triangular Bandages	2 Nos.
20.	Band Aid Dressing	5 Pcs.
21.	Iodex / Moov (25 gms.)	1 Bottole
22.	Tongue Depressor	1 No.
23.	Boric Acid Powder (20 gms.)	2 Pkt.
24.	Sodium Bicarbonate (20 gms.)	1 Pkt.
25.	Dressing Powder (Nebasulf) (10 gms.)	1 Bottole
26.	Medicinal Glass	1 No.
27.	Duster	1 No.
28.	Booklet (English & Local Language)	1 No. each
29.	Soap	1 No.
30.	Toothache Solution	1 No.
31.	Eye Ointment	1 Bottle
32.	Vicks (22 gms.)	1 Bottle
33.	Forceps	1 No.
34.	Cotton Buds (5 nos.)	1 Pkt.
35.	Note Book	1 No.
36.	Splints	4 Nos.
37.	Lock	1 Piece
38.	Life Saving/Emergency/Over-the Counter Drugs	As decided at site
	Box size : 14” x 12” x 4”	

Note : The medicines prescribed above are only indicative. Equivalent medicines can also be used. A prescription, in this regard, shall be required from a qualified Physician.

ANNEXURE – C

TYPE OF FIRES VIS-À-VIS FIRE EXTINGUISHERS

Fire	Fire Extinguishers				
	Water Foam		CO_2	Dry Powder	Multi Purpose (ABC)
Originated from paper, clothes, wood	√	√ Can	control minor surface fires	Can control minor surface fires	√
Inflammable liq uids like alcohol, diesel, petrol, edible oils, bitumen	x	√	√	√	√
Originated from gases like LPG, CNG, H_2	x x		√	√	√
Electrical Fires	x x		√	√	√

Legend : √ Can be used
x Not to be used

Note : Fire extinguishing equipment must be checked atleast once a year and after every use by an authorized person. The equipment must have an inspection label on which the next inspection date is giver:. Type of extinguisher shall clearly be marked on it.

ANNEXURE – D

Indicative List of Statutory Acts & Rules Relating to HSE

- The Indian Explosives Act and Rules
- The Motor Vehicle Act and Central Motor Vehicle Rules
- The Factories Act and concerned Factory Rules
- The Petroleum Act and Petroleum Rules
- The Workmen Compensation Act
- The Gas Cylinder Rules and the Static & Mobile Pressure Vessels Rules.
- The Indian Electricity Act and Rules
- The Indian Boiler Act and Regulations
- The Water (Prevention & Control & Pollution) Act
- The Water (Prevention & Control of Pollution) Cess Act
- The Mines & Minerals (Regulation & Development) Act
- The Air (Prevention & Control of Pollution) Act
- The Atomic Energy Act
- The Radiation Protection Rules
- The Indian Fisheries Act
- The Indian Forest Act
- The Wild Life (Protection) Act
- The Environment (Protection) Act and Rules
- The Hazardous Wastes (Management & Handling) Rules
- The Manufacturing, Storage & import of Hazardous Chemicals Rules
- The Public Liability Act
- The Building and Other Construction Workers (Regulation of Employment and Condition of service) Act
- Other statutory acts Like EPF, ESIS, Minimum Wage Act.

ANNEXURE – E

CONSTRUCTION HAZARDS, THEIR EFFECTS & PREVENTIVE MEASURES

ACTIVITY	*TYPE OF HAZARD*	EFFECT OF HAZARD	PREVENTIVE MEASURES
(A) EXCAVATION Pit Excavation up to 3.0m	➢ Falling into pit	➢ Personal injury	➢ Provide guard rails/barricade with warning signal. ➢ Provide at least two entries/exits. ➢ Provide escape ladders.
	➢ Earth Collapse	➢ Suffocation / Breathlessness ➢ Buried	➢ Provide suitable size of shoring and strutting, if required. ➢ Keep soil heaps away from the edge equivalent to 1.5m or depth of pit whichever is more. ➢ Don't allow vehicles to operate too close to excavated areas. Maintain at least 2m distance from edge of cut. ➢ Maintain sufficient angle of repose. Provide slope not less than 1:1 and suitable bench of 0.5m width at every 1.5m depth of excavation in all soils except hard rock. ➢ Battering/benching the sides.
	➢ Contact with buried electric cables ➢ Gas/ Oil Pipelines	➢ Electrocution ➢ Explosion	➢ Obtain permission from competent authorities, prior to excavation, if required. ➢ Locate the position of buried utilities by referring to plant drawings. ➢ Start digging manually to locate the exact position of buried utilities and thereafter use

ACTIVITY	TYPE OF HAZARD	EFFECT OF HAZARD	PREVENTIVE MEASURES
			mechanical means.
Pit Excavation beyond 3.0m	➢ Same as above plus ➢ Flooding due to excessive rain/ underground water	➢ Can cause drowning situation	➢ Prevent ingress of water ➢ Provide ring buoys ➢ Identify and provide suitable size dewatering pump or well point system
	➢ Digging in the vicinity of existing Building/ Structure	➢ Building/ Structure may collapse ➢ Loss of health & wealth	➢ Obtain prior approval of excavation method from local authorities ➢ Use under-pining method ➢ Construct retaining wall side by side
	➢ Movement of vehicles / equipments close to the edge of cut.	➢ May cause cave-in or slides ➢ Persons may get buried	➢ Barricade the excavated area with proper lighting arrangements ➢ Maintain at least 2m distance from edge of cut and use stop block to prevent over-run. ➢ Strengthen shoring and strutting
Narrow deep excavations for pipelines, etc.	➢ Same as above plus ➢ Frequent cave-in or slides	➢ May cause severe injuries or prove fatal	➢ Battering/benching of sides ➢ Provide escape ladders
	➢ Flooding due to Hydrostatic testing	➢ May arise drowning situation	➢ Same as above plus ➢ Bail out accumulated water ➢ Maintain adequate ventilation
Rock excavation by blasting	➢ Improper handling of explosives	➢ May prove fatal	➢ Ensure proper storage, handling & carrying of explosives by trained personnel. ➢ Comply with the applicable explosive acts & rules.
	➢ Uncontrolled explosion	➢ May cause severe injuries or prove fatal	➢ Allow only authorized persons to perform blasting operations. ➢ Smoking and open

ACTIVITY	TYPE OF HAZARD	EFFECT OF HAZARD	PREVENTIVE MEASURES
			flames are to be strictly prohibited.
	➢ Scattering of stone pieces in atmosphere	➢ Can hurt people	➢ Use PPE like goggles, face mask, helmets etc.
Rock excavating by blasting (Contd)	➢ Entrapping of persons/ animals.	➢ May cause severe injuries or prove fatal	➢ Barricade the area with red flags and blow siren before blasting.
	➢ Misfire	➢ May explode suddenly	➢ Do not return to site for at least 20 minutes or unless announced safe by designated person.
Piling Work	➢ Failure of pile-driving equipment	➢ Can hurt people	➢ Inspect Piling rigs and pulley blocks before the beginning of each shift.
	➢ Noise pollution	➢ Can cause deafness ➢ and psychological imbalance	➢ Use personal protective equipments like ear plugs, muffs, etc.
	➢ Extruding rods / casing	➢ Can hurt people	➢ Barricade the area an install sign boards ➢ Provide first-aid
	➢ Working in the vicinity of 'Live-Electricity'	➢ Can cause electrocution / asphyxiation	➢ Keep sufficient distance from Live-Electricity as per IS code. ➢ Shut off the supply, if possible ➢ Provide artificial/rescue breathing to he injured.
(B) CONCRETING	➢ Air pollution by cement	➢ May affect Respiratory System	➢ Wear respirators or cover mouth and nose with wet cloth.
	➢ Handling of ingredients	➢ Hand s may get injured	➢ Use gloves and other PPE.
	➢ Protruding reinforcement rods.	➢ Feet may get injured	➢ Use Safety shoes. ➢ Provide platform above reinforcement for movement of workers.
	➢ Earthing of electrical mixers,	➢ Can cause electrocution / asphyxiation	➢ Ensure earthing of equipments and proper functioning of

ACTIVITY	TYPE OF HAZARD	EFFECT OF HAZARD	PREVENTIVE MEASURES
	vibrators, etc. not done		electrical circuit before commencement of work.
	➢ Falling of materials from height	➢ Persons may get injured	➢ Use hard hats ➢ Remove surplus material immediately from work place ➢ Ensure lighting arrangements during night hours.
	➢ Continuous pouring by same gang	➢ Cause tiredness of workers and may lead to accident.	➢ Insist on shift pattern ➢ Provide adequate rest to workers between subsequent pours.
	➢ Revolving or concrete mixer/ vibrators	➢ Parts of body or clothes may get entrapped.	➢ Allow only mixers with hopper ➢ Provide safety cages around moving motors ➢ Ensure proper mechanical locking of vibrator
Super-structure	➢ Same as above plus ➢ Deflection in props or shuttering material	➢ Shuttering / props may collapse and prove fatal	➢ Avoid excessive stacking on shuttering material ➢ Check the design and strength of shuttering material before commencement of work ➢ Rectify immediately the deflection noted during concreting
	➢ Passage to work place	➢ Improperly tied and designed props / planks may collapse	➢ Ensure the stability and strength of passage before commencement of work ➢ Do not overload and under the passage.
(C) REINFORCEMENT	➢ Curtailment and binding of rods	➢ Persons may get injured	➢ Use PPE like gloves, shoes, helmets, etc. ➢ Avoid usage of shift tools
	➢ Carrying of rods for short distance/ at	➢ Workers may injure their hands and shoulders	➢ Provide suitable pads on shoulders and use safety

ACTIVITY	TYPE OF HAZARD	EFFECT OF HAZARD	PREVENTIVE MEASURES
	heights		gloves. ➢ Tie up rods in easily liftable bundles ➢ Ensure proper staging.
	➢ Checking of clear distance/ cover with hands	➢ Rods may cut or injure the finger	➢ Use measuring devices tape, measuring rods, etc.
	➢ Hitting projected rods and standing on cantilever rods	➢ Persons may get injured and fall down	➢ Use safety shoes and avoid standing unnecessarily on cantilever rods ➢ Avoid wearing loose clothes
	➢ Falling of material from height	➢ May prove fatal	➢ Use helmets ➢ Provide safety nets
	➢ Transportation of rods by trucks / trailers	➢ Protruded rods may hit the persons	➢ Use red flags/lights at the ends ➢ Do not protrude the rods in front of or by the side of driver's cabin. ➢ Do not extend the rods 1/3rd of deck length or 1.5 m which is less
(D) WELDING AND GAS CUTTING	➢ Welding radiates invisible ultraviolet and infrared says	➢ Radiation can damage eyes and skin.	➢ Use specified shielding devices and other PPE of correct specifications ➢ Avoid throated tungsten electrodes for GTAW.
	➢ Improper placement of oxygen and acetylene cylinders	➢ Explosion may occur	➢ Move out any leaking cylinder ➢ Keep cylinder in vertical position ➢ Use trolley for transportation of cylinders and chain them ➢ Use flash back arrestors
	➢ Leakage / cuts in hoses	➢ May cause fire	➢ Purge regulators immediately and then turn off ➢ Never use grease or

ACTIVITY	TYPE OF HAZARD	EFFECT OF HAZARD	PREVENTIVE MEASURES
			oil on oxygen line connections and copper fittings on acetylene lines ➢ Inspect regularly gas carrying hoses ➢ Always use red hose for acetylene & other fuel gases and black for oxygen.
	➢ Opening-up of cylinder	➢ Cylinder may burst	➢ Always stand back from the regulator while opening the cylinder ➢ Turn valve slowly to avoid bursting ➢ Cover the lug terminals to prevent short circuiting.
	➢ Welding of tanks, container or pipes storing flammable liquids	➢ Explosion may occur	➢ Empty & purge them before welding ➢ Never attach the ground cable to tanks, container or pipe storing flammable liquids ➢ Never use LPG for gas cutting
(E) RADIOGRAPHY	➢ Ionizing Radiation	➢ Radiations may react with the skin and can cause cancer, skin irritation, dermatitis, etc.	➢ Ensure safety regulations as per BARC/AERB before commencement of job. ➢ Cordon off the area and install Radiation warning symbols ➢ Restrict the entry of unauthorized persons ➢ Wear appropriate PPE and film badges issued by BARC/AERB
	➢ Transportation and Storage of Radiography source	➢ Same as above	➢ Never touch or handle radiography source with hands ➢ Store radiography source inside a pit in an exclusive isolated

ACTIVITY	TYPE OF HAZARD	EFFECT OF HAZARD	PREVENTIVE MEASURES
			storage room with lock and key arrangement. The pit should be approved by BARC/AERB ➢ Radiography source should never be carried either in passenger bus or in a passenger compartment of trains. ➢ BARC/AERB have to be informed before source movement. ➢ Permission from Director General of Civil Aviation is required for booking radio isotopes with airlines.
	➢ Loss of Radio isotope	➢ Same as above	➢ Try to locate with the help of Survey Meter. ➢ Inform BARC/AERB(*) (*) Atomic Energy Regulatory Board (AERB), Bhabha Atomic Research Centre (BARC) Anushaktinagar, Mumbai – 400 094
(F) ELECTRICAL INSTALLATION AND USAGE	➢ Short circuiting	➢ Can cause Electrocution or Fire	➢ Use rubberized hand gloves and other PPE ➢ Don't lay wires under carpets, mats or door ways. ➢ Allow only licensed electricians to perform on electrical facilities ➢ Use one socket for one appliance ➢ Ensure usage of only fully insulated wires or cables ➢ Don't place bare wire ends in a socket

ACTIVITY	*TYPE OF HAZARD*	EFFECT OF HAZARD	PREVENTIVE MEASURES
			➢ Ensure earthing of machineries and equipments ➢ Do not use damaged cords and avoid temporary connections ➢ Use spark-proof/flame proof type field distribution boxes. ➢ Do not allow open/bare connections ➢ Provide all connections through ELCB ➢ Protect electrical cables / equipment's from water and naked flames ➢ Check all connections before energizing.
	➢ Overloading of Electrical System	➢ Bursting of system can occur which leads to fire	➢ Display voltage and current ratings prominently with 'Danger' signs. ➢ Ensure approved cable size, voltage grade and type. ➢ Switch off the electrical utilities when not in use. ➢ Do not allow unauthorized connections. ➢ Ensure proper grid wise distribution of Power.
	➢ Improper laying of overhead and underground transmission lines / cables	➢ Can cause electrocution and prove fatal	➢ Do not lay unarmored cable directly on ground, wall, roof of trees ➢ Maintain at least 3m distance from HT cables ➢ All temporary cables should be laid at least 750 mm below ground on 100 mm

ACTIVITY	TYPE OF HAZARD	EFFECT OF HAZARD	PREVENTIVE MEASURES
			fine sand overlying by brick soling ➢ Pr ovide proper sleeves at crossings/ intersections ➢ Provide cable route markers indicating the type and depth of cables at intervals not exceeding 30m and at the diversions / termination.
(G) FIRE PREVENTION AND PROTECTION	➢ Sm all fires can become big ones and may spread to the surrounding areas	➢ Caus e burn injuries and may prove fatal.	➢ In case a fire breaks out, press fire alarm system and shout "Fire, Fire" ➢ Keep buckets full of sand & water/fire extinguishing equipment near hazardous locations ➢ Confine smoking to 'Smoking Zones' only ➢ Train people for using specific type of fire equipments under different classes of fire ➢ Keep fire doors/ shutters, passages and exit doors unobstructed ➢ Maintain good house keeping and first-aid boxes (for detail refer Annex-2) ➢ Don't obstruct assess to Fire extinguishers ➢ Do not use elevators for evacuation during fire ➢ Maintain lightening arrestors for elevated structures ➢ Stop all electrical motors with internal combustion. ➢ Move the vehicles from dangerous

ACTIVITY	TYPE OF HAZARD	EFFECT OF HAZARD	PREVENTIVE MEASURES
			locations. ➢ Remove the load hanging from the crane booms. ➢ Remain out of the danger areas.
	➢ Improper selection of Fire Extinguisher	➢ It may not extinguish the fire	➢ Ensure usage of correct fire extinguisher meant for the specified fire (for details refer Appendix-C) ➢ Do not attempt to extinguish Oil and electric fires with water. Use foam cylinders/CO_2/sand or earth.
	➢ Improper storage of highly inflammable substances	➢ Same as above	➢ Maintain safe distance of flammable substances from source of ignition ➢ Restrict the distribution of flammable materials to only min. necessary amount ➢ Construct specifically designed fuel storage facilities ➢ Keep chemicals in cool and dry place away from hat. Ensure adequate ventilation ➢ Before welding operation, remove or shield the flammable material properly ➢ Store flammable materials in stable racks, correctly labeled preferably with catchments trays. ➢ Wipe off the spills immediately

ACTIVITY	TYPE OF HAZARD	EFFECT OF HAZARD	PREVENTIVE MEASURES
	➢ Short circuiting of electrical system	➢ Same as above ➢ Can cause Electrocution	➢ Don't lay wires under carpets, mats or door ways ➢ Use one socket for one appliance ➢ Use only fully insulated wires or cables ➢ Do not allow open/bare connections ➢ Provide all connections through ELCB ➢ Ensure earthing of machineries and equipments
(H) VEHICULAR MOVEMENT	➢ Crossing the Speed Limits (Rash driving)	➢ Personal injury	➢ Obey speed limits and traffic rules strictly ➢ Always expect the unexpected and be a defensive drive ➢ Use seat belts/helmets ➢ Blow horn at intersections and during overtaking operations. ➢ Maintain the vehicle in good condition ➢ Do not overtake on curves, bridges and slopes
	➢ Adverse weather condition	➢ Same as above	➢ Read the road ahead and ride to the left ➢ Keep the wind screen and lights clean ➢ Do not turn at speed ➢ Recognize the hazard, understand the defense and act correctly in time.
	➢ Consuming alcohol before and during he	➢ Same as above	➢ Alcohol and driving do not mix well. Either choose

ACTIVITY	TYPE OF HAZARD	EFFECT OF HAZARD	PREVENTIVE MEASURES
	driving operation		alcohol or driving. ➢ If you have a choice between hitting a fixed object or an oncoming vehicle, hit the fixed object ➢ Quit the steering at once and become a passenger. Otherwise take sufficient rest and then drive. ➢ Do not force the driver to drive fast and round the clock ➢ Do not day dram while driving
	➢ Falling objects / Mechanical failure	➢ May prove fatal	➢ Ensure effective braking system, adequate visibility for the drives, reverse warning alarm. ➢ Proper maintenance of the vehicle as per manufacturer instructions
(I) PROOF TESTING (HYDROSTATIC/ PNEUMATIC TESTING	➢ Bursting of piping ➢ Collapse of tanks ➢ Tanks flying off	➢ May cause injury and prove fatal	➢ Prepare test procedure & obtain CONSULTANT/ Owner's approval ➢ Provide separate gauge for pressurizing pump and piping/equipment ➢ Check the calibration status of all pressure gauges, dead weight testers and temperature recorders ➢ Take dial readings at suitable defined intervals and ensure most of them fall between 40-60% of the gauge scale range ➢ Provide safety relief valve (set at

ACTIVITY	*TYPE OF HAZARD*	EFFECT OF HAZARD	PREVENTIVE MEASURES
			pressure slightly higher than test pressure) while testing with air/nitrogen ➢ E nsure necessary precautions, stepwise increase in pressure, tightening of bolts/ nuts, grouting, etc. before and during testing ➢ Keep the vents open before opening any valve while draining out of water used for hydro testing of tanks ➢ Pneum atic testing involves the hazard of released energy shored in compressed gas. Specific care must therefore be taken to minimize the chance of brittle failure during a pneumatic leak test. Test temperature is important in this regard and must be considered when the designer chooses the material of construction ➢ A pressure relief device shall be provided, having a set pressure not higher than the test pressure plus the lesser of 345 KPa (50 psi) or 10% of he test pressure. The gas used as test fluid, if not air, shall be nonflammable and nontoxic.
(J) WORKING AT HEIGHTS	➢ Person can fall down	➢ M ay sustain severe injuries or	➢ Pr ovide guard rails/barricade at the

ACTIVITY	*TYPE OF HAZARD*	EFFECT OF HAZARD	PREVENTIVE MEASURES
		prove fatal	work place ➢ Use PPE like safety belts, full body harness, life line, helmets, safety shoes, etc. ➢ Obtain a permit before starting the work at height above 3 meters ➢ Fall arrest systems like safety nets, etc. must be installed ➢ Pr ovide adequate working space (min. 0.6 m) ➢ T ie/weld working platform with fixed support ➢ Use roof top walk ladder while working on a slopping roofs ➢ Avoid movement on beams
		➢ May hit the scrap / material stacked at the ground or in between	➢ Keep the work place neat and clean ➢ Remove the scrap immediately
	➢ Material can fall down	➢ May hit the workers working at lower levels and prove fatal.	➢ Same as above plus ➢ Do not throw or drop material or equipment from height ➢ All tools to be carried in a toolkit bags or on working uniform ➢ Remove scrap from the planks ➢ Ensure wearing of helmet by the workers at low level
(K) CONFINED SPACES	➢ Suf focation / drowning	➢ Unc onsciousness, death	➢ Us e respiratory devices, if required ➢ Avoid over crowding inside a confined space ➢ Pr ovide Exhaust Fans for ventilation ➢ Do not wear loose clothes, neck ties,

ACTIVITY	TYPE OF HAZARD	EFFECT OF HAZARD	PREVENTIVE MEASURES
			etc. ➢ Fulfill conditions of the permit. ➢ Check for presence of hydrocarbons, O_2 level ➢ Obtain work permit before entering a confined space ➢ Ensure that the connected piping of the equipment which is to be opened is pressure free, fluid has been drained, vents are open and piping is positively isolated by a blind flange
	➢ Presence of foul smell and toxic substances	➢ Inhalation can pose threat to life.	➢ Same as above plus ➢ Check for hydrocarbon and Aromatic compounds before entering a confined space ➢ Depute one person outside the confined space for continuous monitoring and for extending help in case of an emergency
	➢ Ignition / flame can cause fire	➢ Person may sustain burn injuries or explosion may occur	➢ Keep fire extinguishers at a hand distance ➢ Remove surplus material and scrap immediately ➢ Do not smoke inside a confined space ➢ Do not allow gas cylinders inside a confined space ➢ Use low voltage (24V) lamps for lighting ➢ Use tools with air motors or electric tools with max.

ACTIVITY	TYPE OF HAZARD	EFFECT OF HAZARD	PREVENTIVE MEASURES
			voltage of 24V ➢ Remove all equipments at the end of the day
(L) HANDLING AND LIFTING EQUPMENTS	➢ Failure of load lifting and moving equipments	➢ Can cause accident and prove fatal	➢ Avoid standing under the lifted load and within the operating radius of cranes ➢ Check periodically oil, brakes, gears, horns and tyre pressure of all moving machinery ➢ Check quality, size and condition of all chain pulley blocks, slings, U-clamps, D-shackles, wire ropes, etc. ➢ Allow crane to move only on hard, firm and leveled ground ➢ Allow lifting slings as short as possible and check gunny packings at the friction points ➢ Do not allow crane to tilt its boom while moving ➢ Install Safe Load Indicator ➢ Ensure certification by applicable authority.
	➢ Overloading of lifting equipments	➢ Can cause electrocution and fire	➢ Safe lifting capacity of derricks and winches written on them shall be got verified. ➢ The max safe working load shall be marked on all lifting equipments ➢ Check the weight of columns and other heavy items painted on them and accordingly decide about the crane

ACTIVITY	TYPE OF HAZARD	EFFECT OF HAZARD	PREVENTIVE MEASURES
			capacity, boom and angle of erection ➢ Allow only trained operators and riggers during crane operation
	➢ Overhead electrical wires	➢ Can cause electrocution and fire	➢ Do not allow boom or other parts of crane to come within 3 m reach of overhead HT cables ➢ Hook and load being lifted shall preferably remain in full visibility of crane operator.
(M) SCAFFOLDING, FORMWORK AND LADDERS	➢ Person can fall down	➢ Person may sustain severe injuries and prove fatal	➢ Provide guard rails for working at height ➢ Face ladder while climbing and use both hands ➢ Ladders shall extend about 1m above landing for easy access and tying up purpose ➢ Do not place ladders against movable objects and maintain base at ¼ unit of the working length of the ladder ➢ Suspended scaffolds shall not be less than 500 mm wide and tied properly with ropes ➢ No loose planks shall be allowed ➢ Use PPE, like helmets, safety shoes, etc.
	➢ Failure of scaffolding material	➢ Same as above	➢ Inspect visually all scaffolding materials for stability and anchoring with permanent structures. ➢ Design scaffolding

ACTIVITY	TYPE OF HAZARD	EFFECT OF HAZARD	PREVENTIVE MEASURES
			for max. load carrying capacity ➢ Sc affolding planks shall not be less than 50x250 mm full thickness lumber or equivalent. These shall be cleared or secured and must extend over the end supports by at least 150mm and not more that 300 mm ➢ Don't overload the scaffolds ➢ Do not splice short ladders to make a longer one. Vertical ladders shall not exceed 6m.
	➢ Mater ial can fall down	➢ Per sons working at lower level gets injured.	➢ R emove excess material and scrap immediately ➢ Carry the tools in a tool-kit bag only ➢ Provide safety nets
(N) STRUCTURAL WORKS	➢ Per sonal negligence and danger of fall	➢ Can cause injury or casualty	➢ Do not take rest inside rooms built for welding machines or electrical distribution system ➢ Avoid walking on beams at height ➢ Wear helmet with chin strap and safety belts when working at height ➢ Use hand gloves and goggles during grinding operations ➢ Cover or mark the sharp and projected edges ➢ Do not stand within the operating radius of cranes
	➢ Lifting / slipping of	➢ Same as above	➢ Do not stand under the lifted load

ACTIVITY	TYPE OF HAZARD	EFFECT OF HAZARD	PREVENTIVE MEASURES
	material		➢ Stack properly all the materials. Avoid slippage during handling ➢ Control longer pieces lifted up by cranes from both ends ➢ Remove loose materials from height ➢ Ensure tightening of all nuts and bolts
(O) PIPELINE WORKS	➢ Erection / lowering failure	➢ Can cause injury	➢ Do not stand under the lifted Load ➢ Do not allow any person to come within the radii of the side boom handling pipes ➢ Check the load carrying capacity of the lifting tools and tackles ➢ Use safe Load Indicators ➢ Use appropriate PPEs
	➢ Other	➢ Same as above	➢ Wear gum boots in marshy areas ➢ Allow only one person to perform signaling operations while lowering of pipes ➢ Provide night caps on pipes ➢ Provide end covers on pipes for stoppage of pigs while testing/cleaning operations.

FORMAT NO. : HSE-1, REV. 0

HSE CHECKLIST CUM COMPLIANCE REPORT (1/6)

Project: _____ Contractor :_____
Date: _____ Owner :_____
Inspection By:_____ Report No. :_____
Frequency : Fortnightly Job No : _____

Note: write 'NA' wherever the item is not applicable

SL. NO.	ITEM	YES	NO	REMARKS	ACTION
1	**HOUSEKEEPING**				
a)	Waste containers provided and used				
b)	Sanitary facilities adequate and clean				
c)	Passageways and Walkways clear				
d)	General neatness of working areas				
e) O	thers				
2	**PERSONNEL PROTECTIVE EQUIPMENT**				
a)	Goggles; Shields				
b)	Face protection				
c)	Hearing protection				
d)	Safety shoes				
e)	Hand protection				
f) Respir	atory Masks etc.				
g)	Safety Belts				
h)	Safety Helmet/Hard Hat				
I) Oth	ers				
3	**EXCAVATIONS/OPENINGS**				
a)	Openings properly covered or barricaded				
b)	Excavations shored				
c)	Excavations barricaded				
d)	Overnight lighting provided				
e) O	thers				
4	**WELDING & GAS CUTTING**				
a)	Gas cylinders chained upright				
b)	Cables and hoses not obstructing				
c)	Screens or shields used				
d)	Flammable materials protected				
e)	Fire extinguisher(s) accessible				
f) O	thers				
5	**SCAFFOLDING**				
a)	Fully decked platforms				
b)	Guard and intermediate rails in place				

SL. NO.	ITEM	YES	NO	REMARKS	ACTION
c)	Toe boards in place				
d)	Adequate shoring				
e)	Adequate access				
f) O	thers				
6	**LADDERS**				
a)	Extension side rails 1m above				
b)	Top of landing				
c)	Properly secured				
d)	Angle + 70 from horizontal				
e) O	thers				
7	**HOISTS, CRANES AND DERRICKS**				
a)	Condition of cables and sheaves OK				
b)	Condition of slings, chains, hooks and eyes OK				
c)	Inspection and maintenance logs maintained				
d)	Outriggers used				
e)	Signs/barricades provided				
f)	Signals observed and understood				
g)	Qualified operators				
h) O	thers				
8	**MACHINERY, TOOLS AND EQUIPMENT**				
a)	Proper instruction				
b)	Safety devices				
c)	Proper cords				
d)	Inspection and maintenance				
e) O	thers				
9	**VEHICLE AND TRAFFIC**				
a)	Rules and regulations observed				
b)	Inspection and maintenance				
c)	Licensed drivers				
d) O	thers				
10	**TEMPORARY FACILITIES**				
a)	Emergency instructions posted				
b)	Fire extinguishers provided				
c)	Fire-aid equipment available				
d)	Secured against storm damage				
e)	General neatness				
f)	In accordance with electrical requirements				
g) O	thers				
11	**FIRE PREVENTION**				
a)	Personnel instructed				
b)	Fire extinguishers checked				
c)	No smoking in Prohibited Areas				
d)	Hydrants Clear				

SL. NO.	ITEM	YES	NO	REMARKS	ACTION
e) O	thers				
12	**ELECTRICAL**				
a)	Use of 3-core armoured cables				
b)	Usage of 'All insulated' or 'double insulated' electrical tools				
c)	All electrical connection are routed through ELCB				
d)	Natural Earthing at the source of power (main DB)				
e)	Continuity and tightness of earth conductor				
f)	Covering of junction boxes, panels and other energized wiring places				
g)	Ground fault circuit interrupters provided				
h)	Prevention of tripping hazards				
i) O	thers				
13	**HANDLING AND STORAGE OF MATERIALS**				
a)	Properly stored or stacked				
b)	Passageways clear				
c) Others					
14	**FLAMMABLE GASES AND LIQUIDS**				
a)	Containers clearly identified				
b)	Proper storage				
c)	Fire extinguishers nearby				
d) O	thers				
15	**WORKING AT HEIGHT**				
a)	Erection plan and work permit obtained				
b)	Safety nets				
c)	Full body harness and lanyards; chute lines				
d)	Health Check record available for workers going up?				
e) O	thers				
16	**CONFINED SPACE**				
a)	Work permit obtained				
b)	Test for toxic gas and sufficient availability of oxygen conducted				
c)	At least one person outside the confined space for monitoring deputed				
d)	Availability of sufficient means of entry, exit and ventilation				
e)	Fire extinguishers and first-aid facility ensured				
f)	Lighting provision made by using 24V lamps				
g)	Proper usage of PPEs ensured				
17	**RADIOGRAPHY**				
a)	Proper storage and handling of source as per BARC / AREB guidelines				
b)	Working permit obtained				
c)	Cordoning of the area done				

SL. NO.	ITEM	YES	NO	REMARKS	ACTION
d)	Use of appropriate PPE's ensured				
e)	Proper training to workers/supervisors imparted				
f)	Minimum occupancy of workplace ensured				
18	**HEALTH CHECKS**				
a)	Workers medically examined and found to fit for working : i) At heights ii) In confined space.				
b)	Availability of First-aid facilities				
c)	Proper sanitation at site, office and labour camps				
d)	Arrangement of medical facilities				
e)	Measures for dealing with illness				
f)	Availability of Portable drinking water for workmen & staff				
g)	Provision of crèches for children				
h)	Stand by vehicle available for evacuation of injured.				
19	**ENVIRONMENT**				
a)	Chemical and other effluents properly disposed				
b)	Cleaning liquid of pipes disposed off properly				
c)	Seawater used for hydro-testing disposed off as per agreed procedure				
d)	Lubricant Waste/Engine oils properly disposed				
e)	Waste from Canteen, offices, sanitation etc. disposed properly				
f)	Disposal of surplus earth, stripping materials, oily rags and combustible materials done properly				
g)	Green belt protection				

Signature of Resident
Engineer with Seal

FORMAT NO. : HSE-2, REV. 0

ACCIDENT / INCIDENT REPORT

(To be submitted by Contractor after every Accident / Incident within 24 hours)

Repor t No:_____

Date: _____

Name of Site:-_____

CONTRACTOR_____

Type of Accident / Incident : ☐ Fatal ☐ Other Lost Time ☐ Non Loss Time ☐ First-Aid case

---

NAME OF THE INJURED……

AGE …….

FATHER'S NAME……..

SUB-CONTRACTOR M/S……..

DATE & TIME OF ACCIDENT……

LOCATION ……

BRIEF DESCRIPTION OF ACCIDENT

CAUSE OF ACCIDENT

NATURE OF INJURY/DAMAGE

MEDICAL AID PROVIDED/ACTIONS TAKEN

INTIMATION TO LOCAL AUTHORITIES (IF APPLICABLE)

DATE: SI GNATURE OF CONTRACTOR
W ITH SEAL

To : OWNER…….. 1 COPY
: RCM/SITE-IN-CHARGE, MECON 3 COPIES

→ Divisional Head (Constn.) through RCM
→ Project Manager MECON, through RCM

FORMAT NO. : HSE-3, REV. 0

SUPPLEMENTARY ACCIDENT / INCIDENT INVESTIGATION REPORT

Supplementary to Report No: _____(Copy enclosed)

Project:_____ Sit e:_____
Name of Work :_____ Date:_____
Contractor:_____ Work Order / LOI No. :_____

NAME OF THE INJURED …….
AGE : ……...
SUB-CONTRACTOR M/S……...
DATE & TIME OF ACCIDENT / INCIDENT ……
LOCATION……

BRIEF DESCRIPTION & CAUSE OF A ACCIDENT/ INCIDENT

NATURAL OF INJURY/DAMAGE

COMMENTS FROM MEDICAL PRACTITIONER WHO ATTENDED THE VICTIM/INJURED

SUGGESTED IMPROVEMENT IN THE WORKING CONDITION IF ANY

LOSS OF MANHOURS AND IMPACT ON SITE WORKS

ANY OTHER COMMENT BY SAFETY OFFICER.

DATE: SI GNATURE OF CONTRACTOR
W ITH SEAL

To : OWNER…….. 1 COPY
: RCM/SITE-IN-CHARGE, MECON 3 COPIES

→ Divisional Head (Constn.) through RCM
→ Project Manager MECON, through RCM

FORMAT NO. : HSE-4, REV. 0

NEAR MISS INCIDENT – SUGGESTED PROFORMA

Report No: _____

Name of Site :_____ Date :_____

Name of Work :_____ Contractor :_____

INCIDENT REPORTED BY :

DATE & TIME OF INCIDENT :

LOCATION :

BRIEF DESCRIPTION OF INCIDENT

PROBABLE CAUSE OF INCIDENT

SUGGESTED CORRECTIVE ACTION

STEPS TAKEN TO AVOID RECURRENCE YES ☐ NO ☐

DATE: SI GNATURE OF CONTRACTOR
W ITH SEAL

To : OWNER…….. 1 COPY
: RCM/SITE-IN-CHARGE, MECON 3 COPIES

→ Divisional Head (Constn.) through RCM
→ Project Manager MECON, through RCM

FORMAT NO. : HSE-5, REV. 0

MONTHLY HEALTH, SAFETY & ENVIRONMENT (HSE) REPORT
(To be submitted by each Contractor)

Actual work start Date:_____ For the Month of:_____
Project:_____ R eport No:_____
Name of the Contractor:_____ Status as on:_____
Name of Work:_____ Name of Safety officer:_____

ITEM U			PTO PREVIOUS MONTH	THIS MONTH	CUMU-LATIVE
a)	Average number of Staff & Workmen (average daily headcount, not man days)				
b)	Manhours Worked				
c)	Number of HSE meeting organized at site				
d)	Number of HSE awareness programmes conducted at site				
e)	Number of Lost Time Accidents (LTA)	Fatal			
		Other LTA			
f)	Number of Loss time Injuries (LTI)	Fatalities			
		Other LTI			
g)	Number of Loss Time Accidents				
h)	Number of First Aid Cases				
i)	Number of Near Miss Incidents				
j)	Man-days lost due to accidents				
k)	LTA Free Manhours i.e. Number of LTA free manhours from the Lst LTA				
l)	Compensation cases raised with Insurance				
m)	Compensation case resolved and paid to workmen				
n)	Whether workmen compensation policy taken		Y/N		
o)	Whether workmen compensation policy valid		Y/N		
p)	Whether workmen registered under ESI Act		Y/N		
Remark					

DATE: Saf ety Officer /Resident Engineer
(Signature and Name)

To : OWNER
: RCM/, MECON (2 COPIES)

FORMAT NO. : HSE-6, REV. 0

PERMIT FOR WORKING AT HEIGHT (ABOVE 2 METER)

Project Site : …… Sr. No.: ……
Name of the work: …… Date: ……
Name of Contractor : …….. Nature of Work : ……
Total No.of Workers: …….. Exact location of work : ……
Duration of work: from …….. to ……

The f ollowing i tems hav e been checked and compl iance shal l be ensured during the currency of the permit:

Sl.	ITEM	DONE	NOT REQD.
1.	Equipment/Work Area inspected	☐	☐
2.	Considered hazard from other routine/non-routine operations and concerned person alerted	☐	☐
3.	ELCB provided	☐	☐
4.	Proper lighting provided	☐	☐
5.	Area cordoned off.	☐	☐
6.	Precautions against public traffic taken	☐	☐
7.	Sound Scaffolding provided	☐	☐
8.	Adequate protected Platform provided	☐	☐
9.	Acces and Exit to the area (Ladder properly fixed)	☐	☐
10.	Floor Openings covered	☐	☐
11.	Safety Net provided	☐	☐
12.	Heath check of personnel	☐	☐

A. Following personal protective equipment are provided (mark) and used as relevant Safety helmet/Gloves/Goggles/Shoes/Face Shield/Life Line/Safety Belt/Safety Harness.

B. This permit shall be available at the work site at all times.

C. Permit shall be issued for maximum one week only (Monday to Sunday).

D. This permit shall be applicable in non-operational areas.

E. After completion of the work, used permits shall be preserved for record purposes.

F. Additional precautions, if any …….

Permission is granted to work (See overleaf) = Yes/No

Name of Contractor's Supervisor (Initiator)

Name of Contractor's Safety Officer (Issuing Authority)

GRANT OF PERMIT AND EXTENSIONS

Sl. No.	Validity Period From …… To ……	Work time From …..Hrs. To …….Hrs.	Initiator (Supervisor of Contractor)	Issuing Authority (Safety Officer) of Contractor	Verification by CONSULTANT with date

Additional safety instructions, if any.

FORMAT NO. : HSE-7, REV. 0

CONFINED SPACE ENTRY PERMIT

Project Site : …… Sr. No.: ……
Name of the work: …… Date: ……
Name of Contractor : …….. Nature of Work : ……
Exact location of work : …….

Safety Requirements : POSITIVE ISOLATION OF THE VESSEL IS MANDATORY

(A) Has the equipment been ?					
Y	**NR**		**Y**	**NR**		**Y**	**NR**	
☐	☐	isolat ed from power / steam / air	☐	☐	water flushed &/or steamed	☐	☐	r adiation sources removed
☐	☐	isolated from liquid or gases	☐	☐	Manways open & ventilated	☐	☐	Pr oper lighting provided
☐	☐	depr essurized &/or drained	☐	☐	cont. inset gas flow arranged	☐	☐	
☐	☐	blanked / blinded / disconnected	☐	☐	adequately cooled	☐	☐	

(B) Expected Residual Hazards								
Y	**NR**		**Y**	**NR**		**Y**	**NR**	
☐	☐	lack of O_2	☐	☐	combustible gas / liquid	☐	☐	H_2S / toxic gases
☐	☐	corrosiv e chemicals	☐	☐	pyrophoric iron / scales	☐	☐	electricity / static
☐	☐	Heat / stream / frost	☐	☐	high humidity	☐	☐	ionizing radiation
☐	☐		☐	☐		☐	☐	

(C) Protective Measures								
Y	**NR**		**Y**	**NR**		**Y**	**NR**	
☐	☐	g loves	☐	☐	ear plug / muff	☐	☐	goggles / face shield
☐	☐	protective clothing	☐	☐	dust / gas / air line mask	☐	☐	personal gas alarm
☐	☐	G rounded air educater / blower / AC	☐	☐	at tendant with SCBA / air mask	☐	☐	rescue equipment / team
☐	☐	F ire fighting arrangements	☐	☐	safety harness & lifeline	☐	☐	com munication equipment
☐	☐		☐	☐		☐	☐	

Authorization / Renewal (It is safe to enter the confirmed space)

Date	No. of Persons Allowed	Name of Persons allowed	Signature Contractor's Supervisor	Signature Contractor's Safety Officer	Time From	Time To	Signature Workman

Permit Closure :

(A) Entry ☐ was closed ☐ stopped ☐ will continue on

(B) ☐ Site left in a safe condition
☐ Housekeeping done

(C) Multi lock ☐ removed ☐ key transferred
☐ Ensured all men have come out ☐ Manways barricaded

Remarks, if any :

FORMAT NO. : HSE-8, REV. 0

RADIATION WORK PERMIT

Project : S r. No.:

Name of the work : D ate:

Name of Contractor : Job No. :

Location of work :

Source Strength :

Cordoned distance (m) :

Name of Radiographing agency : Approved by Owner / MECON ☐

The following items have been checked & compliance shall be ensured during currency of the permit :

S. No.	Item Description	Done
1.	Safety regulations as per BARC/AERB ensured while source in use/ in transit & during storage.	☐
2.	Area cordoned off.	☐
3.	Lighting arrangements for working during nights ensured.	☐
4.	Warning signs / flash lights installed.	☐
5.	Cold work permit taken (if applicable)	☐
6.	PPEs like film badges, dosimeters used.	☐

Additional precautions, if any _____

(Radiography Agency's BARC / AREB authorized Supervisor) (Contractor's Safety Officer)

Permission is granted.

Permit is valid from _____ AM/PM _____ Date to _____ AM/PM _____ Date

(Signature of permit issuing authority)

Name : Designation : Date :

Permit renewal :

Permit extended upto		Additional precautions required, if any.	Sign of issuing authority with date
Date T	ime		

Work completed / stopped / area cleared at _____ Hrs. of Date _____

(Sign of permit issuing authority)
Name :

FORMAT NO. : HSE-9, REV. 0

RADIATION WORK PERMIT

Project : S r. No.:

Name of the work : D ate:

Name of Contractor : Job No. :

Name of Contractor :

Line No. / Equipment No. /Structure to be dismantled :

Location details of dismantling / demolition with sketch : (Clearly indicate the area)

The following items have been checked & compliance shall be ensured during currency of the permit :

S. No.	Item Description	Done	Not Applicable
1.	Services like power, gas supply, water, etc. disconnected.	☐	☐
2.	Dismantling / Demolishing method reviewed & approved.	☐	☐
3.	Usage of appropriate PPEs ensured.	☐	☐
4.	Precautions taken for neighboring structures	☐	☐
5.	First-Aid arrangements made	☐	☐
6.	Fire fighting arrangements ensured	☐	☐
7.	Precautions taken for blasting	☐	☐

(Contractor's Supervisor) (Contractor's Safety Officer)

Permission is granted.

(Permit issuing authority)
Name :
Date :

Completion Report :

Dismantling / Demolishing is completed on _____ Date at _____ Hrs.

Materials / debris transported to identified location ☐

Tagging completed (as applicable) ☐

Services like power, gas supply, water, etc. restored ☐

(Permit issuing authority)

Edition : 1

SPECIFICATION
FOR
QUALITY ASSURANCE SYSTEMS
REQUIREMENTS

SPECIFICATION NO.: MEC/S/05/21/66

(OIL & GAS SBU)
MECON LIMITED
DELHI 110 092

CONTENTS

Sl.No.	Description
1.0	INTRODUCTION
2.0	DEFINITIONS
3.0	CONTRACTORS SCOPE OF WORK
4.0	QUALITY ASSURANCE REQUIREMENTS

FORMAT FOR QUALITY PLAN FORMAT 00001

FORMAT FOR OBSERVATION ON FORMAT 00002

1.0 INTRODUCTION

This specification establishes the Quality Assurance Requirements to be met by the sub-contractors (including turnkey Contractors) and their sub-vendors.

In case of any conflict between this specification and other provisions of the contract/ purchase order, the same shall be brought to the notice of MECON, at the stage of bidding and shall be resolved with MECON, prior to the placement of order.

2.0 DEFINITION

Bidder

For the purpose of this specification, the word "Bidder" means the person(s), firm, company or organisation who is under the process of being contracted by MECON/ Owner for delivery of some products (including service). The word is considered synonymous to supplier, contractor or vendor.

Correction

Action taken to eliminate the detected non-conformity.

Refers to repair, rework or adjustment and relates to the disposition of an existing non-conformity.

Corrective Action

Action taken to eliminate the causes of an existing non- conformity, defect or other undesirable situation in order to prevent recurrence.

Preventive Action

Action taken to eliminate the causes of a potential non-conformity, defect or other undesirable situation in order to prevent its recurrence.

Process

Set of inter-related resources and activities which transform inputs into outputs.

Special Process

Processes requiring pre-qualification of their process capability.

3.0 CONTRACTORS SCOPE OF WORK

3.1 Prior to award of contract

The bidder shall understand scope of work, drawings, specifications and standards etc., attached to the tender/ enquiry document, before he makes an offer.

The bidder shall submit milestone chart showing the time required for each milestone activity and linkages between different milestone activities along with overall time period required to complete the entire scope of work.

The bidder shall develop and submit manpower and resource deployment chart.

The bidder shall submit, along with the bid, a manual or equivalent document describing/ indicating/ addressing various control/ check points for the purpose of quality assurance and the responsibilities of various functions responsible for quality assurance.

3.2 After the award of contract

The bidder shall submit the schedule for submission of following documents in the kick-off meeting or within two weeks of the placement of order, whichever is earlier.

- Detailed Bar Chart
- Quality plan for all activities, required to be done by the bidder, to accomplish offered scope of work.
- Inspection and test plans, covering various control aspects.
- Job procedures as required by MECON/ Owner.
- Procurement schedule for items to be supplied by contractor covering inspection of the same.

Various documents submitted by the bidder shall be finalised in consultation with MECON. Here it shall be presumed that ones a bidder has made an offer, he has understood the requirements given in this specification and agrees to comply with them in totality unless otherwise categorically so indicated during pre-award stage through agreed deviation/ exception request. All Quality Assurance Plan (QAP) documents shall be reviewed by concerned functional groups of MECON and the bidder shall be required to incorporate all comments within the framework of this specification at this stage of the contract. It is also obligatory on the part of the bidder that obtains approval on every Quality Assurance Plan (QAP) documents, before he starts using a particular document for delivery of contracted scope of work. Participation of MECON/ Owner in review/ approval of quality plan/ QAP documents does not absolve the contractor of his contractual obligations towards specified and intended use of the product (or service) provided/ to be provided by him under the contract.

3.3 **During job execution**

During job execution, the bidder shall fully comply with all quality document submitted and finalised/ agreed against the requirements of this specification. Approval of MECON on all these documents shall be sought before start of work.

Bidder shall produce sufficient quality records on controlled/ agreed forms such that requirements given in this specification are objectively/ demonstrable.

Bidder shall facilitate MECON/ Owner during quality/ technical audits at his works/ sites.

Bidder shall discharge all responsibilities towards enforcement of this specification on all his sub-contractors for any part of the scope which is sub-contracted.

4.0 **QUALITY ASSURANCE SYSTEM REQUIREMENTS**

4.1 The bidder shall nominate an overall incharge of the contract titled as "Project Manager" for the scope of work of agreed contract. The name of this person shall be duly intimated to MECON including all subsequent changes, if any. MECON shall correspond only with the project manager of the bidder on all matters of the project. The project manager of the bidder shall be responsible for co-ordination and management of activities with bidder's organisation and all sub-vendors appointed by the bidder.

After award of work, the bidder may review augmentation of manpower and resources deployment chart (submitted earlier), detail it out, if so consented by MECON/ Owner and resubmit the same as "issued for effective implementation of the project".

4.2 The bidder shall plan the contract scope of work on quality plan format such that no major variation is expected during delivery of contract scope of work. These quality plan shall be made on enclosed format complete in all respect. The quality plan shall be assumed to be detailing bidder's understanding and planning for the contract/ offered scope of work. The bidder shall plan the type of resources including various work methodology which he agrees to utilize for delivery of contract scope of work.

4.3 The bidder is required to review the contract at all appropriate stages to evaluate his capabilities with respect to timely and quality completion of all activities pertaining to contracted scope of work and shall report for constraints, if any to MECON/ Owner.

4.4 The design activities, if any, performed during delivery of contract scope of work shall be so controlled that the outputs is reliable enough. It is expected that during development of design, the bidder shall take recourse to detailed checking, inter departmental reviews and documented verification methods.

4.5 For all documents which the bidder is likely to utilise for delivery of contract scope of work, a system must exist which assures that latest/ required version(s) of the document(s) is available at all location/ point of use.

4.6 In case the bidder decides to sub-contract any part/ full of the contract scope of work (without prejudice to main Contractual condition), the bidder shall :

- Evaluate the technical and financial capabilities and past performance of the sub-contractor(s) and their products and/ or services before awarding them with the sub-contracted scope of work. Selection of a sub-contractor should meet MECON approval in documented form.

- Requirement of this specification shall be enforced on sub-contracted agency also. The bidder shall choose sub-contractor based on their capability to meet requirements of this specification also.

  Note: It may so happen that, in a given situation, a sub-contractor may not have a system meeting the requirements of this specification. In all such eventualities, bidder may lend his system to sub-contractor for the contract such that sub-contractor effectively meets the requirements of this specification. In all such cases MECON shall be duly informed.

4.7 Bidder shall establish adequate methodology such that the materials supplied by the Owner/ MECON shall be adequately preserved, handled and made use of for the purpose for which they are provided.

4.8 All output delivered against contract scope of work shall be suitably identified in such a manner that either through identification or some other means, sufficient traceability is maintained which permits effective resolution of any problem reported in the outputs.

4.9 Critical activities shall be identified and the bidder is required to have documented methodologies which he is going to utilize for carrying out such activities under the contract scope of work. Wherever it is difficult to fully inspect or verify the output (special process), bidder shall pre-qualify, the performers and methodologies.

4.10 All inspections carried out by the bidder's surveillance/ inspection staff shall be conformity to quality plans and/ or inspection and test plans. All inspection results shall be duly documented on controlled/ agreed forms such that results can be co-related to specific product, that was inspected/ tested.

4.11 All inspection, measuring & test equipments (IMTEs) shall be duly calibrated as per National/ International standards/ codes and only calibrated and certified IMTEs shall be utilized for delivery of contract scope of work.

4.12 All outputs/ products delivered against contract scope of work shall be duly marked such that their inspection status is clearly evident during all stages/ period of the contract.

4.13 All non-conformities (NCs) found by the contractor's inspection/ surveillance staff shall be duly recorded, including their disposal action. The deficiencies observed during stage of the product, shall be recorded and resolved suitably. Effective corrective and preventive action shall be implemented by the bidder for all repetitive NCs, including deficiencies.

4.14 All deficiencies noticed by MECON/ Owner representative(s) shall be recorded on a controlled form (Format No. 00002). Such deficiencies shall be analysed by the bidder and effective and appropriate correction, corrective and preventive actions shall be implemented. Bidder shall intimate MECON/ Owner of all such corrective and preventive action implemented by him.

4.15 Bidder shall establish appropriate methodologies for safe and effective handling, storage, preservation of various materials/ inputs encountered during delivery of contract scope of work.

4.16 Bidder shall prepare sufficient records for various processes carried out by him for delivery of contract scope of work such that requirements of this specification are objectively demonstrable. In case MECON/ Owner finds that enough objective evidence/ recording is not available for any particular process, bidder shall be obliged to make additional records so as to provide sufficient objective evidence. The decision of MECON/ Owner shall be final and binding on such issues.

4.17 The bidder shall arrange internal quality audits at quarterly intervals, to independently assess the conformance by various performers to the requirements of this specification. The findings of such assessment shall be duly recorded and a copy shall be sent to MECON/ Owner for review.

4.18 For all special processes, bidder shall deploy only qualified performers. Wherever MECON/ Owner observes any deficiency, the bidder shall arrange the adequate training to the performer(s) before any further delivery of work.

FORMAT ï 00001

Bidder's Quality Plan		Project Name :				PO/ Contract Ref:				
General			Performing Functions			Inspection Functions			Audit Function	
Activity Description	Procedure Number	Code of Conformance	Performer	Checker	Reviewer/ Approver	Sampling Plan	Testing and Inspection Code	Type of (Approval) Surveillance	Audit Scope	Owner's/ MECON Review/ Audit Requirement

Note: 1) The bidder ensures that the filled up format conforms to minimum requirements on Quality Plan/ Quality Assurance, specified by MECON on drawings/ standards/ specifications/ write-up.

2) The bidder confirms that document is issued for information/ approval of Owner/ MECON for the project implementation

OBSERVATION OF QUALITY ASPECTS

FORMAT – 00002

Job No. and Description Issued to : M/s		No. : Date :	
Location of Work : Item of Work :			
Details of Observation(Deficiency)	Recommended Course of Action Time Allowed for Correction :		
Issued by : _____ Name of Signature of RCM, MECON Site			
Corrective Action taken report by Contractor/ Vendor : Date : Name and Signature			
Distribution (before resolution) :			
Project Manager Owner	Chief Business Executive MECON	MECON Inspection New Delhi	Resident Construction Manager, MECON Site
Verification of Resolution by MECON : Date : Name of Signature			
Distribution (before resolution) :			
Project Manager Owner	Chief Business Executive MECON	MECON Inspection New Delhi	Resident Construction Manager, MECON Site

Rev. : 0
Edition : 1

SPECIFICATION
FOR
DOCUMENTATION FOR PIPELINE CONSTRUCTION

SPECIFICATION NO.: MEC/S/05/21/69

(OIL & GAS SBU)
MECON LIMITED
DELHI 110 092

CONTENTS

SL.NO.	DESCRIPTION
1.0 SC	OPE
2.0 RE	CORDS
3.0	AS-BUILT DRAWINGS AND PIPE BOOK

PREPARED BY:	CHECKED BY:	APPROVED BY:	ISSUE DATE :
(Shalini Singh)	(Sunil Kumar)	(A.K. Johri)	Jan. 2008

1.0 **SCOPE**

1.1 This specification covers the minimum requirements of various records, reports and drawings for all aspects of pipeline construction to be prepared by Contractor and submitted to the Company at intervals as described in this specification and as directed by Company.

1.2 All document required to prepared and submitted by Contractor as per this specification shall be in addition to the various reports, records, methodology statement, calculation, drawings etc. to be submitted by the Contractor for Company's record, review or approval as per the requirements of all other specification included in the Contract between the Company and Contractor.

1.3 This specification shall be read in conjunction with the conditions of all specifications and document included in the Contract between Company and Contractor.

2.0 **RECORDS**

Contractor shall submit daily, weekly, monthly and after completion to the Company, various records and reports for Company's documentation purpose during and immediately after the construction. This shall as minimum include, but not limited to the following :

2.1 **Daily**

- Separate progress reports of all crews
- Daily welding results and repairs
- Actual weather conditions
- Application for deviations, if any
- Accidents
- Damages
- Activities required from Company
- Materials Receipts
- Urgently required materials

2.2 **Weekly**

- Up-to-date list of confirmed site instruction issued by Company
- Materials `taken over'
- Material defects and repairs
- Outstanding activities of Company

- List of installed markers, chainage
- Required approval from Company
- Progress planned
- Reports of manning of all crews, equipment and plant
- Report of equipment and plant
- Report of accidents
- Report of damages
- Report of acquired release, permits
- Priced variations
- Required materials for next month

2.3 **Monthly**

- Progress report for payment, safety report, report of accidents, security report, health and environment report, material balance, approved deviations.

2.4 Further, Contractor shall supply (for approval if required to the Company with document such as but not limited :

- Organogram for construction work.
- Bio-data of key personnel (including foremen).
- (Revised) list of address of personnel in particular of medical staff, safety and security offers.
- (Revised) list of approved coaters.
- (Revised) list of approved sub-contractors.
- Time schedule.
- Acquired permits and/ or approvals from Authorities, if any.
- Minutes of meeting with Company with comments, if any.
- Material certificates, material receipt.
- Guarantee from vendors and sub-contractor.
- Calculations, temporary works, bouyance, blasting.
- Drawings issued by Contractor.
- Vendors drawings.
- As-built of route maps, alignment sheets, details drawings and isometric drawings.
- Procedures such as surveying, stacking, fencing.
- Welding procedure qualification records, radiographic procedure qualification, welder qualification.
- Coating procedure.
- Installation of crossings.
- Hydrostatic testing.
- Blasting.

- Radiographic report alongwith original radiographs
- Pipe and welding book.
- Reports

  - Material tests (coating, welding, painting)
  - Computerised Potential Logging Test
  - Water Samples
  - Cleaning, Pigging Report before Hydrostatic Test
  - Hydrostatic Test
  - Calibration Test
  - Blasting Trials
  - Equipment certificate (dead weight tester, instruments, vessels, equipment)
  - Manuals
  - Major water crossings
  - Waste disposal
  - Disposal of water after hydrostatic test.

2.5 Contractor shall submit to company colour photographs of various construction activities/ operations at regular intervals. Size, number and frequency of the photographs shall be mutually agreed upon at a later stage. Also Contractor shall make video recordings of all operations right from the start of construction till the completion of the work, covering to the extent as instructed by Company and submit to Company. Upon completion of the work, Contractor and submit edited master tape plus six copies of video recording in VHS formats or any format ordered by the Company. The duration of video recording shall be of ½ hour and shall cover all aspects of the job.

3.0 **AS-BUILT DRAWINGS AND PIPE BOOK**

3.1 **General**

Contractor shall prepare "as-built" drawings of all by or on behalf of Company issued drawings and of all Contractor work drawings including vendor drawing, such as but not limited to :

For Pipeline Section :

- Route Maps
- Alignment Sheets
- Detail Drawings (road, railway, minor water crossings, major water crossings, valley crossings)

- Isometric drawings of installations
- Special installation

Further Contractor shall prepare a pipe Weld Book.

If required by the Company, Contractor shall update the diskettes for drawings issued for construction of the job.

3.2 **"As-Built" Drawings**

Contractor shall prepare a complete set of "as-built" drawings. From the start of construction, Contractor shall on daily basis process any changes in two sets of drawings. Deleted parts shall be indicated in red, new parts in blue, remarks in green and unchanged parts in yellow. Said drawings shall be kept at site and be available to Company at all times. Contractor shall prepare "as-built" drawings based on these data. On completion of the work, one revised film transparency of all drawing made "as-built" by Contractor containing the "as-built" information shall be handed over to Company as well as one complete set of CD ROM/ floppy diskettes as specified by Company.

Contractor shall prepare and submit a specimen of the layout of the drawings for Company's approval.

The required measurement for "as-built" drawing shall be executed by Contractor by experienced, qualified surveyors.

The surveyors shall daily take care of all measurement required such as but not limited to:

- Horizontal location of pipeline with regard to deviations and Permanent Grid Pillars.
- Vertical Level with regard to Mean Sea Level of pipeline and grade.
- Location and type of bends, fittings etc. and grades, points of intersection.
- Change of wall thickness, materials.
- Location and details of valves, insulating flanges, fencing.
- Location and details of crossing pipes, vents.
- Location and type of coating.
- Location and type of weighting, anchoring.
- Location and type of markers.
- Location of further appurtenance (Pig-Signallers)
- Location of ROU and of pipeline with respect to ROU.
- Type of soil.

- Type of rock
- Type of blasting and ripping.
- Sand padding.
- Type of road pavement.
- Details of bank protection, number of insulators, seals.

Contractor shall also prepare isometric drawings of all installation (facilitates) etc. for which the data as mentioned in or required for the Pipe and Welding Book can be identified and these drawings can also be used for material accounting.

3.3 **Nameplates of Equipment**

All permanent equipment supplied and installed by Contractor shall be provided with plates by Contractor. All texts shall be submitted to Company for approval before plates may be manufactured.

3.4 **Pipe Book**

Every page of the pipe and Welding Book shall mention:

- Data relevant to the project and section there of.
- Sequential number.
- Length brought forward (for pipes and other materials).
- Length to bring forward (for pipes and other materials).

Alignment sheet number and atleast the location thereon of two welds on every page of the pipe Book.

Further,

- Diameter of pipeline
- Length of each pipe
- Wall thickness
- Pipe number
- Heat number, certificate number
- Cut and re-numbered pipe ends
- Coating type
- Date of stringing
- Date of welding
- Weld number
- Welder number
- Direction of working

- Type of welding, electrodes, diameter of electrode etc.
- Heat treatment
- Equipment used for radiography
- Limits of water crossings
- Test pressure and date of test.

In order to achieve this, Contractor shall identify all pipe elements. Sample format of Pipe Book shall be submitted for Company approval.

3.5 **As-Built Documents**

Contractor shall prepare all documents in the prescribed format as indicated below. In addition to the hard copies, softcopies of final documents shall also be submitted in electronic media i.e. CD / DVD format.

Software used for the preparation of these documents shall be as follows:

Type document	Software
a) Reports/ Documents	MS Office
b) Drawings	AutoCAD

For the purpose of preparation of as-built drawings, Contractor shall update the "Issued for construction" drawings issued by the Company. It shall be the Contractor's responsibility to covert the drawings furnished by the Company in hard copy into CAD drawings including scanning, digitising and converting the drawings into a suitable format compatible with the AutoCAD and above. As-built drawings shall be prepared only on AutoCAD drawings.

PROCESS & PIPING DESIGN SECTION
MECON LIMITED
DELHI 110 092

TECHNICAL SPECIFICATION
FOR
WARNING MATS

SPECIFICATION NO. : MEC/TS/05/62/042, Rev-1

SPECIFICATION FOR PE ANTI RODENT WARNING MATS FOR PIPELINE

Purpose	:	For using as a warning sign for Underground Pipeline
Width	:	D + 300 mm, D – Dia of Line Pipe
Thickness	:	1.0 mm thick
Material of the mat	:	The material shall be of high density Polyethylene of virgin quality and non Biodegradable type. It shall have Non Hazardous, Non Toxic and Anti – Rodent properties.
Colour of the mat	:	Golden Yellow with letters printed in RED of non-deletable type with high abrasion resistant.
Art Work	:	A sample piece of 30mm wide and 200mm long of every batch shall be checked by immersing in 20% solution of Ammonium Sulphide for period of 2 weeks at a temperature of 15°C for colour intactness of the strip. Copy of Art work is enclosed at Page 4. **The Art work shall be printed in English and local language alternatively at every 1 mtr distance.**
Mechanical Properties of HDPE		
Tensile Strength	:	Minimum 200 kg/cm^2
Elongation at Break	:	Minimum 175%
Bundle Length	:	1.0 mm thick warning mat shall be supplied as 100 mtrs length in each bundle packed in PE Woven sack material.
Tests	:	Minimum following test has to be done with each batch of warning mat ➢ Tensile Strength test ➢ Elongation test ➢ Impact Strength test ➢ Color fastness test ➢ Heat Stability test ➢ Print Stability test

- Oxidation Induction test
- ESCR test
- Melt Flow Rate test
- Anti-Rodent Test.
- UV Stabilizer Test
- DSC Scan Test of Raw Material & Finish Goods.

Test Certificates : Vendor has to submit the all test certificates to Purchaser

Inspection : The manufacturer has to submit the QAP before commencement of production. Inspection of the material will be done at vendor‘s works by Client / MECON Representative. Vendor has to submit all test reports before inspection call. Any test failed during the inspection for the offered lot, the total lot will be rejected.

Documentation : Vendor shall submit all test reports including document regarding Toxicology data & ROHS compliance, documentary evidence regarding Non-biocide product, value of Lethal Dosage (LD), value of % dermal toxicity, details of active ingredient in the product and final inspection reports along with the supply of materials.

HIGH PRESSURE GAS PIPELINE BELOW

CLIENT NAME

COMPANY NAME

IN EMERGENCY PLEASE CONTACT

PHONE NOS. …….

Rev. : 0
Edition : 1

SPECIFICATION
FOR
SEAMLESS FITTINGS & FLANGES
[SIZE UPTO DN 400 mm (16”) NB]

SPECIFICATION NO.: MEC/TS/05/21/025

(OIL & GAS SBU)
MECON LIMITED
DELHI 110 092

CONTENTS

SL.NO.	DESCRIPTION
1.0	SCOPE
2.0	REFERENCE DOCUMENTS
3.0	MANUFACTURERÕS QUALIFICATION
4.0	MATERIALS
5.0	DESIGN AND MANUFACTURE
6.0	INSPECTION AND TESTS
7.0	TEST CERTIFICATES
8.0	PAINTING, MARKING AND SHIPMENT
9.0	DOCUMENTATION

1.0 SCOPE

This specification covers the minimum requirements for the design, manufacture and supply of following carbon steel flanges and fittings of size upto DN 400 mm (16") to be installed in onshore pipeline systems handling non-sour hydrocarbons in liquid or gaseous phase including Liquefied Petroleum Gas (LPG) :

- Flanges such as w elding neck flanges, blind flanges, spectacle blinds, spacers and blinds etc.

- Seamless fittings such as tees, elbows, reducers, caps, outlets etc.

2.0 REFERENCE DOCUMENTS

2.1 Reference has been made in this specification to the latest edition (edition enforce at the time of issue of enquiry) of the following Codes, Standards and Specifications :

ASME B31.4	-	Pipeline Transportation Systems for Liquid Hydrocarbons and Other Liquids
ASME B31.8	-	Gas Transmission and Distribution Piping Systems
ASME B16.5	-	Pipe Flanges and Flanged Fittings
ASME B16.9	-	Factory Made Wrought Steel Butt Welding Fittings
ASME B 16.11	-	Forged Steel Fittings, Socket Welding and Threaded
ASME B 16.48	-	Steel Line Blanks
ASME Sec VIII	-	Boiler and Pressure Vessel Code - R ules for Construction of Pressure Vessels
ASME Sec IX	-	Boiler and Pressure Vessel Code - Welding and Brazing Qualifications
ASTM A 370	-	Standard Test Methods and Definitions for Mechanical Testing of Steel Products.
MSS-SP-25	-	Standard Marking System for Valves, Fittings, Flanges and Unions

MSS-SP-97 - Forged Carbon Steel Branch Outlet Fittings - Socket Welding, Threaded and Butt welding Ends.

2.2 In case of conflict between the requirements of this specification and t he requirements of above referred Codes and St andards, the requirements of this specification shall govern.

3.0 **MANUFACTURER'S QUALIFICATION**

Manufacturer who intends bidding for fittings must possess t he records of a successful proof test, in accordance with the provisions of ASME B16.9 / MSS-SP-75 as applicable.

4.0 MATERIAL

4.1 The Carbon Steel used in the manufacture of flanges and fittings shall be fully killed. Material for flanges and fittings shall com ply with the material standard indicated in the Purchase Requisition. In addition, the material shall also meet the requirements specified hereinafter.

4.2 Each heat of steel used for the manufacture of flanges and fittings shall have Carbon Equivalent (CE) not greater than 0.45 calculated from check analysis in accordance with the following formula:

$$CE = C + \frac{Mn}{6} + \frac{Cr + Mo + V}{5} + \frac{Ni + Cu}{15}$$

Carbon contents on check analysis shall not exceed 0.22%.

4.3 For flanges and fittings specified to be used for Gas service or LPG service, Charpy V-notch test shall be conduct ed on each heat of steel. Unless specif ied otherwise, the Charpy V-notch test shall be conducted at 0ÁC in accordance with the impact test provisions of ASTM A 370 for flanges and fittings.

The average absorbed impact energy values of three full-sized specimens shall be 27 joules. The minimum impact energy value of any one specimen of the three specimens analysed as above, shall not be less than 22 Joules.

When Low Temperature Carbon Steel (LTCS) materials are specified for flanges and fittings in Pur chase Requisition, the Charpy V-notch test requirements of applicable material standard shall be complied with.

4.4 For flanges and fittings specified to be used for Gas service or LPG service, Hardness test shall be carried out in accordance with ASTM A 370. Hardness testing shall cover at least 10% per item, per size, per heat, per manufacturing method. A full thickness cross section shall be taken for this purpose and the maximum hardness shall not exceed 248 HV_{10}.

4.5 In case of RTJ (Ring Type Joint) flanges, the groove hardness shall be minimum 140 BHN. Ring Joint flanges shall have octagonal section of Ring Joint.

5.0 DESIGN AND MANUFACTURE

5.1 Flanges such as weld neck flanges and blind flanges shall conform to the requirements of ASME B16.5.

5.2 Spectacle blind and spacer & blind shall conform to the requirements of ASME B 16.48.

5.3 Fittings such as tees, elbows, reducers, etc. shall be seamless type and shall conform to ASME B16.9 for sizes DN 50 mm (2") to DN 400 mm (16") (both sizes included) and ASME B 16.11 for sizes below ON 50 mm (2").

5.4 Fittings such as weldolets, sockolets, nippolets, etc. shall be manufactured in accordance with MSS-SP-97.

5.5 Type, face and face finish of flanges shall be as specified in Purchase Requisition.

5.6 Flanges and fittings manufactured from bar stock are not acceptable.

5.7 All butt weld ends shall be bevelled as per ASME B 16.5 / ASME B 16.9 / MSS-SP-97 as applicable.

5.8 Repair by welding on flanges and fittings is not permitted.

5.9 Stub-in or pipe to pipe connection shall not be used in the manufacture of tees. Tees shall be manufactured by forging or extrusion methods. The longitudinal weld seam shall be kept at 90Áfrom the extrusion. Fittings shall not have any circumferential joint .

6.0 INSPECTION AND TESTS

6.1 The Manufacturer shall perform all inspections and tests as per the requirement of this specification and the relevant codes, prior to shipment at his works. Such inspections and tests shall be, not but limited to the following :

a) All flanges and fittings shall be visually inspected. The internal and external surfaces of the flanges and fittings shall be free from any strikes, gauges and other detrimental defects.

b) Dimensional checks shall be carried out on finished products as per ASME B16.5 for flanges, ASME B16.48 for spacers and blinds and ASME B16.9 / MSS-SP-97 as applicable for fittings and as per this specification.

c) Chemical composition and mechanical properties shall be checked as per relevant material standards and this specification, for each heat of steel used.

d) All finished wrought weld ends subject to welding in field, shall be 100% tested for lamination type defects by ultrasonic test. Any lamination larger then 6.35 mm shall not be acceptable.

6.2 Purchaser's Inspector reserves the right to perform stage wise inspection and witness tests, as indicated in clause 6.1 of this specification at Manufacturer's Works prior to shipment. Manufacturer shall give reasonable notice' of time and shall provide, without charge, reasonable access and facilities required for inspection, to the Purchaser's Inspector.

Inspection and tests performed / witnessed by Purchaser's Inspector shall in no way relieve the Manufacturer's obligation to perform the required inspection and tests.

7.0 TEST CERTIFICATES

Manufacturer shall furnish the following certificates:

a) Test certificates relevant to the chemical analysis and mechanical properties of the materials used for manufacture of flanges and fittings as per relevant standards and this specification.

b) Test Reports on non destructive testing.

c) Certificates for each fitting stating that it is capable of withstanding without leakage a test pressure, which results in a hoop stress equivalent to 100 % of

the specified minimum yield strength for the pipe with which the fitting is to be attached without impairment of serviceability.

8.0 PAINTING, MARKING AND SHIPMENT

8.1 After all inspection and tests required have been carried out; all external surfaces shall be thoroughly cleaned to remove grease, dust and rust and shall be applied with standard mill coating for protection against corrosion during transit and storage. The coating shall be easily removable in the field.

8.2 Ends of all fittings and weld neck flanges shall be suitably protected to avoid any damage during transit. Metallic or high impact plastic bevel protectors shall be provided for fittings and flanges. Flange face shall be suitably protected to avoid any damage during transit.

8.3 All flanges and fittings shall be marked as per applicable dimension / manufacturing standard.

9.0 DOCUMENTATION

Documentation to be submitted by Manufacturer to Company is summarized below. Number of Copies (Hard copies / soft copies etc.) shall be as indicated in CONTRACT document / Material Requisition.

9.1 At the time of bidding, Manufacturer shall submit the following documents:

a) Reference list of previous supplies of similar fittings of similar specification.
b) Clausewise list of deviations from this specification, if any.
c) Brief description of the manufacturing and quality control facilities at Manufacturer's works.
d) Manufacturer's qualification requirement as per clause 3.0 of this specification.
e) Quality Assurance Plan (QAP) enclosed with this tender duly signed, stamped and accepted.

9.2 Prior to shipment, the Manufacturer shall submit test certificates as listed in clause 7.0 of this specification.

9.3 All documents shall be in English Language only.

PROCESS & PIPING DESIGN SECTION
MECON LIMITED
DELHI 110 092

मेकॉन

TECHNICAL SPECIFICATION
FOR
ASSORTED PIPES

SPECIFICATION NO. : MEC/TS/05/62/59A, R-0

CONTENTS

Sl.No.	Description	Page No.
1.0	GENERAL	2
2.0	IBR PIPES	4
3.0	H DROSTATIC TEST	5
4.0	MAR ING & DESPATCH	5
ANNEXURE-I :	H DROSTATIC TEST	7

Prepared By	Chec ed By	Appro ed By

1.0 **GENERAL**

1.1 All pipes and their dimensions, tolerances, chemical composition, physical properties, heat treatment, hydrotest and other testing and marking requirements shall conform to the latest codes and standards specified in the Material Requisition (MR). Deviation(s), if any, shall be clearly highlighted in the offer.

1.2 **Testing**

1.2.1 Test reports shall be supplied for all mandatory tests as per the applicable material specifications. Test reports shall also be furnished for any supplementary tests as specified in the MR & Clauses 1.10 & 1.11.

1.2.2 Material test certificates (physical property, chemical composition & treatment report) shall also be furnished for the pipes supplied.

1.3 **Manufacturing Processes**

1.3.1 Steel made by Acid Bessemer Process shall not be acceptable.

1.3.2 All longitudinally welded pipes other than IS:3589 should employ automatic welding.

1.4 Pipe shall be supplied in single or double random length of 4 to 7 and 7 to 14 meters, respectively.

1.5 a) Seamless and E.R.W. pipes shall not have any circumferential seam joint in a random length. However, in case of E.FS.W. pipe, in one random length one welded circumferential seam of same quality as longitudinal weld is permitted. This weld shall be at least 2.5 m from either end. The longitudinal seams of the two portions shall be staggered by 90 . Single random length in such cases shall be 5 to 7m.

b) Unless otherwise mentioned in the respective material code, E.FS.W. pipes 36 shall not have more than one longitudinal seam joint and E.FS.W. pipes ≥ 36 shall not have more than two longitudinal seam joints.

1.6 Pipe with screwed ends shall have NPT ex ternal ta per pipe threa ds conforming to ASME/ ANSI B1.20.1 upto 1.5 NB & IS:554 for 2 to 6 NB.

1.7 Pipe with bevelled ends shall be in accordance with ASME B16.25. Weld contours shall be as follows:

Material	Wall Thic ness	Weld Conto r
Carbon Steel (Except Low Temp. Carbon Steel)	Upto 22mm	Figure 2 Type A
	22mm	Figure 3 Type A
Alloy Steel Stainless Steel & Low Temp. Carbon Steel	Upto 10 mm	Figure 4
	10 mm & Upto 25 mm	Figure 5 Type A
	25 mm	Figure 6 Type A

1.8 Gavanished pipes shall be coated with inc by hot dip process conforming to IS:4736/ ASTM A 153.

1.9 All austenitic stainless steel pipes shall be supplied in so lution annealed condition.

1.10 **I.G.C. Test for Stainless Steels**

1.10.1 For all austenitic stainless steel pipes, intergranular corrosion t est shall have to be conducted as per following:

ASTM A262 practice B with acceptance criteria of 60 mils/ year (max.)

OR

ASTM 262 pra ctice E" with acceptance criteria of No cracks as observed from 20X magnification & Microscopic structure to be observed from 250X magnification .

1.10.2 When specifically asked for in MR for high temperature application of some grades of austenitic stainless steel (eg.SS 309, 310, 316, 316H etc.), ASTM A262 practice C with acceptance criteria of 15 mils/ year (max.) shall have to be conducted.

1.10.3 For the IGC test as described in 1.10.1 & 1.10.2, two sets of samples shall be drawn from each s olution annealing lot one set corresponding t o highest carbon content and the other corresponding to the highest pipe

thickness. When testing in is conducted as per Practice E , photograph of microscopic structure shall be submitted for record.

1.11 All welded pipes indicated as CR O' & LT' in MR sha ll be imp act tested per requirement and acceptance criteria of ASME B31.3. The impact test temperature shall be 196 C & -45 C fo r stainless steel and carbon steel, respectively, unless specifically mentioned otherwise in MR.

1.12 Pipes under NACE' category shall meet the requirements given in MR-01-75.

1.13 Specified heat treatment for carbon steel & alloy steel and solution annealing for stainless steel pipes shall be ca rried out after weld repa irs. Number of weld repairs at the same spot shall be restricted to maximum two by approved repair procedure.

1.14 For black or galvanised pipes t o IS:1239, the minimum percent age of elongation shall be 20 .

2.0 **<u>IBR PIPES</u>**

2.1 **IBR Doc mentation**

2.1.1 Pipes under purview of IBR shall be accompanied with IBR certificate original in Form IIIA, duly ap proved and countersigned by IBR a uthority/ local authority empowered by the Central Boiler Board of India. Photocopy of the original certificate duly attested by the local boiler inspector where the supplier is located is the minimum requirement for acceptance.

2.1.2 For materials 1 Cr- Mo (ASTM A335 Gr. P11/ A691 Gr. 1 Cr) & 2 Cr-1Mo (ASTM A335 Gr.P22/ A691 Gr. 2 Cr.), fro m III-A approved by IBR sha ll include t he tabulation of E_t , S_c & S_r values for t he entire temperature range given below. E_t , S_c & S_r values shall be such t hat throughout the temperature range

$$E_t / 1.5 \geq$$
$$S_r / 1.5 \geq S_a$$
$$S_c \geq$$

where,

S_A : Allowable stress at the working metal temperature.

E_t : ield point (0.2 proof stress at the working metal temperature).

S_c : The average stress to produce elongation of 1 (creep) in 1,00,000 hrs at the working metal temperature.

S_r : The average stress to produce rupture in 1,00,000 hrs. at the working metal temperature and in no case more than 1.33 times the lowest stress to produce rupture at this temperature.

S_A psi	Temperat re F											
Material	**500**	**00**	**50**	**00**	**50**	**00**	**50**	**900**	**950**	**1000**	**1050**	**1100**
A335 Gr. P11	*17200*	*16700*	*16200*	*15600*	*15200*	*15000*	*14500*	*12800*	*9300*	*6300*	*4200*	*2800*
A 91 Gr. 1 Cr	*18900*	*18300*	*18000*	*17600*	*17300*	*16800*	*16300*	*15000*	*9900*	*6300*	*4200*	*2800*
A335 Gr. P2/ A 91 Gr. 2 Cr	*17900*	*17900*	*17900*	*17900*	*17900*	*17800*	*14500*	*12800*	*10800*	*7800*	*5100*	*3200*

Note: S_A values given above are as per ASME B31.3-1999. Values shall be as per the latest edition prevailing.

2.2 For carbon steel pipes under IBR, the chemical composition shall conform to the following

Carbon (max.) : 0.25
Others (S, P, Mn) : As prescribed in IBR regulation.

The chemical composition as indicated in this clause is not applicable for pipes other than IBR services.

3.0 HYDROSTATIC TEST

Refer Annexure I.

4.0 MARKING AND DESPATCH

4.1 All pipes shall be marked in accordance with the applicable codes, standards and specifications. In addition, the purchase order number, the item code & special conditions like IBR , CR O , NACE , etc., shall also be marked.

4.2 Pipes under IBR , CR O , & NACE shall be painted in red stripes, light purple brown stripes & canary yellow stripes, respectively, longitudinally throughout the length for easy identification.

4.3 Paint or ink for marking shall not contain any harmful metal or metallic salts such as inc, lead or copper which cause corrosive attack on heating.

4.4 Pipes shall be dry, clen and free from from moisture, dirt and loos e foreign materials of any kind.

4.5 Pipes shall be protected from rust, corrosion and mechanical damage during transportation, shipment and storage.

4.6 Rust preventive used on machined surfaces to be welded sha ll be easily removable with a petroleum solvent and the same shall not be harmful to welding.

4.7 Both ends of the pipe shall be protected with the following material:

Plain end	:	Plastic cap
Bevel end	:	Wood, Metal or Plastic cover
Threaded end	:	Metal or Plastic threaded cap

4.8 End protectors to be used on bevelle d ends shall be se curely and tightly attached with belt or wire.

4.9 Steel end protectors to be used on galvanised pipes shall be galvanised.

ANNEXURE I

3.0 **HYDROSTATIC TEST**

3.1 All pipes shall be hydrostatically tested.

3.2 The mill test pressure shall be as follows:

3.2.1 **Seamless, E.R.W. & Spiral Welded**

a Car on Steel

Material Standard	Test Press re Standard
ASTM A 106 Gr. B	ASTM A 530
API 5L Gr. B, Seamless	API 5L
API 5L, E.R.W.	API 5L
API 5L, Spiral	API 5L
ASTM A333 Gr.3 & 6, Seamless	ASTM A 530
ASTM A 333 Gr. 3 & 6, E.R.W.	ASTM A 530

Seamless Alloy Steel

Material Standard	Test Press re Standard
ASTM A335 GR. P1, P12, P11, P22, P5, P9	ASTM A 530
ASTM A268 TP 405, TP410	ASTM A530

c Seamless Stainless Steel

Material Standard	Test Press re Standard
ASTM A312 Gr.TP304, 304L, 304H, 316, 316L, 316H, 321, 347	ASTM A 530

d Seamless Nic el Alloy

Material Standard	Test Press re Standard
ASTM B161 UNS No.2200	ASTM B161
ASTM B165 UNS No.4400	ASTM B165
ASTM B167 UNS No.6600	ASTM B167
ASTM B407 UNS No.8800	ASTM B407

e Welded Nic el Alloy

Material Standard	Test Press re Standard
ASTM B725 UNS No.2200, 4400	ASTM B725
ASTM B517 UNS No.6600	ASTM B517
ASTM B514 UNS No.8800	ASTM B514

3.2.2 **Electric F sion Welded**

a Car on Steel & Alloy Steel E.FS.W. 1 & a o e

Material Standard	Test Press re Standard
API 5L Gr.B ASTM A 671 Gr.CC65, 70 (Cl.32) ASTM A 672 Gr.C60, 65, 70 (Cl.12,22) ASTM A 671 Gr.CF60, 65, 66, 70 (Cl.32) ASTM A 691 Gr. Cr, 1Cr, 1 Cr, 2 Cr, 5Cr, 9Cr (Cl.42)	P 2ST/ D S 90 of SM S (except for API 5L Gr.B) S 85 of SM S for API 5L Gr.B T Nominal Wall Thickness D O.D. of Pipe

Stainless Steel E.FS.W. 2 to

The hydrostatic test pressure in kg/ cm^2 for the following materials shall be as given below:

Material Gr.1: ASTM A312 TP304/ 304H/ 316/ 316H/ 321/ 347 welded

Material Gr.2: ASTM A312 TP 304L/ 316L welded

Si e	Pipe Sched le S10		Pipe Sched le S 0		Pipe Sched le S 0	
	Material Gr.1	Material Gr.2	Material Gr.1	Material Gr.2	Material Gr.1	Material Gr.2
2	100	80	155	130	230	190
3	80	60	155	130	230	190
4	80	50	155	130	230	190
6	65	35	90	75	155	130

c Stainless Steel E.FS.W. and a o e .

Material Standard	Test Press re Standard
ASTM A358 TP 304L, 304, 304H, 316L, 316, 316H, 321, 347 (Classes 1, 3 & 4)	P 2ST/D S 85 of SM S T Nominal Wall Thickness D O.D. of Pipe
ASTM A358 TP 304L, 304, 304H, 316L, 316, 316H, 321, 347 (Classes 2 & 5)	P 2ST/D S 72 of SM S T Nominal Wall Thickness D O.D. of Pipe

3.2.3 **Car on Steel Pipes to IS Standards**

Material Standard	Test Press re Standard
IS :1239	IS :1239
IS :3589	IS :3589

STANDARD TECHNICAL SPECIFICATION FOR BALL VALVES

SPECIFICATION NO.: MEC/TS/05/21/002

(OIL & GAS SBU)
MECON LIMITED
DELHI 110 092

PREPARED BY:	CHECKED BY:	APPROVED BY:	ISSUE DATE :

AMENDMENT STATUS

Sl. No.	Clause / Paragraph / Annexure / Exhibit / Drawing Amended	Page No.	Rev.	Date	By		Verified	
					Name	Sig.	Name	Sig.
1.	Cl. No. 4.6	4	1	April 09	Gurdeep Singh		K.K. De	
2.	Overall Revision	All	1	July 20	K.P. Singh		A.K. Tyagi	

Abbreviations :

ASME	:	American Society of Mechanical Engineers
ASTM	:	American Society for Testing and Materials
API	:	American Petroleum Institute
BHN	:	Brinell hardness number
DN	:	Nominal Size
HAZ	:	Heat Affected Zone
LC	:	Lock Close (valve locked in full close position)
LO	:	Lock Open (valve locked in full open position)
MSS-SP	:	Manufacturers Standardization Society ï Standard Practice
NDT	:	Non Destructive Testing
NPS	:	Nominal Pipe Size
RTJ	:	Ring Type Joint
SSPC	:	Steel Structures Painting Council

CONTENTS

Sl.No.	Description
1.0	SCOPE
2.0	REFERENCE DOCUMENTS
3.0	MATERIALS
4.0	DESIGN AND CONSTRUCTION
5.0	INSPECTION AND TESTS
6.0	EXTENT OF INSPECTION & TESTING
7.0	TEST CERTIFICATES
8.0	PAINTING, MARKING AND SHIPMENT
9.0	SPARES AND ACCESSORIES
10.0	DOCUMENTATION
11.0	GUARANTEE
FIGURE-1	VENT, DRAIN & SEALANT INJECTION DETAILS

1.0 SCOPE

This specification covers the minimum requirements for design, manufacture, testing and supply of carbon steel ball valves of size DN 50 mm (2") and above and ANSI pressure rating class 150 to 900 to be used in on-shore pipeline systems handling non-sour hydrocarbons in liquid or gaseous phase, including Liquefied Petroleum Gas (LPG).

This specification does not cover ball valves for sour hydrocarbon (liquid / gas) service as defined in NACE standard MR-01-75.

2.0 REFERENCE DOCUMENTS

2.1 All valves shall be manufactured and supplied in accordance with the latest edition of American Petroleum Institute (API) Specification 6D / ISO 14313, with additions and modifications as indicated in the following sections of this specification.

2.2 Reference has also been made in this specification to the latest edition of the following Codes, Standards and Specifications:

ASME B 16.5	:	Pipe flanges and flanged fittings
ASMEB 16.10	:	Face-to-face and end-to-end dimensions of valves
ASME B 16.25	:	Butt welding ends
ASME B 16.34	:	Valves ï flanged, threaded and welding ends
ASME B16.47	:	Large diameter steel flanges
ASME B 31.3	:	Process piping
ASME B 31.4	:	Pipeline transportation systems for liquid hydrocarbons and other liquids
ASME B 31.8	:	Gas transmission and distribution piping systems
ASME Sec VIII	:	Boiler and pressure vessel code - Rules for construction of pressure vessels
ASME Sec IX	:	Boiler and pressure vessel code - Welding and brazing qualifications
ASTM A 370	:	Standard test methods and definitions for mechanical testing of steel products
ASTM B 733	:	Autocatalytic nickel phosphorous coating on metals
API 6FA	:	Fire test for valves

API 607	:	Fire test for soft-seated quarter-turn valves
API 1104	:	Welding of pipelines and related facilities
BS EN ISO 10497	:	Testing of valves ï Fire type-testing requirements
MSS-SP-6	:	Standard finishes for contact faces of pipe flanges and connecting-end flanges of valves and fittings
MSS-SP-44	:	Steel pipeline flanges
SSPC-VIS-1	:	Steel structures painting council-visual standard

2.3 **In case of conflict** between the requirements of this specification, API 6D and the Codes, Standards and Specifications referred in clause 2.2 above, the requirements of this specification shall govern. Order of precedence shall be as follows :

- Valve Data Sheets
- Material Requisition
- This Specification
- API 6D Specification
- Other Referred Codes & Standards
- Manufacturerôs Standard

3.0 **MATERIALS**

3.1 Material for major components of the valves shall be as indicated in Valve Data Sheet. Other components shall be as per Manufacturerôs standard (suitable for the service conditions indicated in Data Sheet) and shall be subject to approval by Purchaser. In addition, the material shall also meet the requirements specified hereinafter.

3.2 Carbon steel used for the manufacture of valves shall be fully killed.

3.3 The Carbon Equivalent (CE) of valve end connections which are subject to further field welding by Purchaser, shall not exceed 0.43% (as calculated by the following formula) on check analysis for each heat of steel used:

$$CE = \%C + \frac{\%Mn}{6} + \frac{\%Cr + \%Mo + \%V}{5} + \frac{\%Ni + \%Cu}{15}$$

3.4 For Valves specified to be used for Gas service or LPG service, Charpy V-notch test, on each heat of base material shall be conducted as per API 6D Clause 8.5, for all pressure containing parts such as body, end flanges and welding ends as well as bolting material for pressure containing parts. Unless stated otherwise, the Charpy V-notch test shall be conducted at 0 ÁC. Test procedure shall conform to ASTM A370. The average absorbed energy value of three full sized specimens shall be 27 J. The

minimum impact energy value for any one specimen of the three specimens analysed as above, shall not be less than 22 J.

When Low Temperature Carbon Steel (LTCS) materials are specified in Valve Data Sheet or offered by Manufacturer, the Charpy V-notch test requirements of applicable material standard shall be complied with.

3.5 For all such valves where carbon steel is used as ball material, the ball shall have 75 micrometer (0.003 inch) thick Electroless Nickel Plating (ENP) as per ASTM B733 with following classification : SC2, Type II, Class 2. The hardness of plating shall be minimum 50 RC.

3.6 For valves specified to be used for Gas service or LPG service, hardness test shall be carried out as per ASTM A370 for each method of manufacture and each heat of steel used in the manufacture of valves. A full thickness cross-section shall be taken for this purpose and the maximum hardness of the materials of valve components shall not exceed 248 HV_{10}.

3.7 All process-wetted parts, metallic and non-metallic, shall be suitable for the fluids and service specified by the Purchaser. The service gas composition shall be as given elsewhere in the Material Requisition. In addition, Manufacturer shall confirm that all wetted parts are suitable for treated water / seawater environment, which may be used during field testing.

3.8 Non-metallic parts of the valves (including O-rings, soft seal etc.) intended for hydrocarbon gas service at pressures of PN 100 (600 #) and above shall be resistant to explosive decompression.

4.0 DESIGN AND CONSTRUCTION

4.1 Valve design shall meet the requirements of API 6D and other referred codes and shall be suitable for the service conditions indicated in Valve Data Sheet. The ASME Boiler & Pressure Vessel Code, Section VIII, Division 1, may be used to design the valve body. Allowable stress requirements shall comply with the provisions of ASME B31.3. In addition, corrosion allowance indicated in Valve Data Sheet shall be considered in valve design. However, the minimum wall thickness shall not be less than the minimum requirement of ASME B16.34. The Manufacturer shall have a valid license to use API 6D monogram for manufacture of ball valves.

4.2 For above ground valves, valve body design shall be either fully welded or bolted type, as indicated in Valve Data Sheet. Valve body joints with threads are not permitted.

For buried valves, valve body design shall be fully welded type only. Valve body joints with bolts or threads are not permitted.

4.3 Ball shall be of single piece, solid type construction.

4.4 Valves shall be Full Opening (FO) or Reduced Opening (RO) as indicated in Valve Data Sheet. FO valves shall be suitable for the passage of all types of pipeline scraper and inspection pigs on regular basis without causing damage to either the valve component or the pig. The FO valve shall provide an unobstructed profile for pigging operations in either direction. FO valves shall be designed to minimize accumulation of debris in the seat ring region to ensure that valve movement is not impeded.

The opening size of RO valves shall be corresponding to that of a FO valve of smaller nominal diameter as indicated in table below. For sizes of a particular rating not covered in API 6D, the opening sizes of the RO valve shall be as per Manufacturerõs standard.

Nominal Valve Size	Nominal Valve Size for Reduced Opening	Nominal Valve Size	Nominal Valve Size for Reduced Opening
DN $_{mm}$ (NPS $_{inches}$)	**DN $_{mm}$ (NPS $_{inches}$)**	**DN $_{mm}$ (NPS $_{inches}$)**	**DN $_{mm}$ (NPS $_{inches}$)**
50 (2)	50 (2)	600 (24)	500 (20)
80 (3)	50 (2)	650 (26)	550 (22)
100 (4)	80 (3)	700 (28)	600 (24)
150 (6)	100 (4)	750 (30)	600 (24)
200 (8)	150 (6)	800 (32)	650 (26)
250 (10)	200 (8)	850 (34)	700 (28)
300 (12)	250 (10)	900 (36)	750 (30)
350 (14)	250 (10)	950 (38)	800 (32)
400 (16)	300 (12)	1000 (40)	850 (34)
450 (18)	350 (14)	1050 (42)	900 (36)
500 (20)	400 (16)	1200 (48)	1050 (42)
550 (22)	450 (18)		

4.5 Ball mounting shall be trunnion / pivot type or as indicated in Valve Data Sheet. Ball mounting, either trunnion or floating, unless otherwise specified, shall be as follows.

Sl. No.	ANSI Pressure Rating	Nominal Valve Size (NPS $_{inches}$)	
		Floating Ball	**Trunnion Mounted**
1.	150#	≤ 8ò	> 8ò
2.	300#	≤ 4ò	> 4ò
3.	600#	Nil	≥ 2ò

Valve design shall minimize the possibility of debris ingress into the trunnion as far as practicable.

4.6 Valve seats shall have metal to metal contact. O-rings or other seals, if used for drip tight sealing, shall be encased in a suitable groove in such a manner that it can not be removed from seat ring and there is no extrusion during opening or closing operation of valve at maximum differential pressure corresponding to valve class rating. The seat rings shall be so designed as to ensure sealing at low as well as high differential pressures.

4.7 Valves shall have double block and bleed feature to facilitate complete flushing, draining and venting of the valve body cavity.

4.8 For valves to be used in liquid service, the body cavity over-pressure shall be prevented by self relieving seat rings / assemblies. A pressure relief hole in the ball is not permitted. Self relieving seat rings shall relieve at a body cavity differential pressure not exceeding 50% of the valve class rating pressure.

4.9 Valves shall be designed to withstand a sustained internal vacuum of at least 1 (one) milli-bar in both open and closed positions.

4.10 FO valves of nominal size DN 200 mm (8") & above and RO valves of nominal size DN 250 mm (10") & above shall have provision for secondary sealant injection under full line pressure for seat and stem seals. All sealant injection connections shall be provided with a needle valve, a grease fitting and non-return valve. Valve design shall have a provision to replace the sealant injection fitting under full line pressure. Location and arrangement of sealant points shall be as per Figure-1.

4.11 Valves shall be provided with vent and drain connections. Location and arrangement of vents and drains shall be as per Figure-1. Body vent and drain shall be provided with valves (ball or plug type). Number and size shall be as per Figure-1.

4.12 Valve design shall ensure repair of stem seals / packing under full line pressure.

4.13 a) Valve ends shall be either flanged or butt welded or one end flanged and one end butt welded as indicated in Valve Data Sheet. Flanges of the flanged end cast/ forged body valves shall be integrally cast / forged with the body of valve. Face-to-face/ end-to-end dimensions shall conform to API 6D. Face-to-face and end-to-end dimensions for valve sizes not specified in API 6D shall be in accordance with ASME B 16.10. Face-to-face and end-to-end dimensions not shown in API 6D or in ASME B 16.10 shall be as per Manufacturer Standard and shall be subject to approval by Purchaser.

b) Flanged ends shall have flanges as per ASME B16.5 for valve sizes up to DN 600 mm (24 inches) excluding DN 550 mm (22 inches) and as per MSS-SP-44 / ASME B 16.47 series A for valve sizes DN 550 mm (22 inches) & for DN 650 mm (26 inches) and above. Flange face shall be either raised face or ring joint type (RTJ) as indicated in Valve Data Sheet. Flange face finish shall be serrated or smooth as indicated in Valve Data Sheet. Smooth finish when specified shall be 125 to 200 microinches AARH. In case of RTJ flanges, the groove hardness shall be minimum 140 BHN.

c) Butt weld end preparation shall be as per ASME B16.25. The thickness of the pipe to which the valve has to be welded shall be as indicated in Valve Data Sheet. Valves shall be without transition pups, unless otherwise specified in Valve Data sheet. In case significant difference exists between thickness of welding ends of valve and connecting pipe, the welding ends of valve shall have bevel preparation as per ASME B31.4 or ASME B31.8, as applicable.

4.14 Design of weld end valves shall be such that during field welding operations, the soft seals or plastic components of the valve (where ever used) are not liable to be damaged. The Manufacturer shall furnish necessary field welding instructions and post-weld test procedure to demonstrate integrity and leak-tightness of valves after field welding operations.

4.15 Valves shall be provided with ball position indicator and stops of rugged construction at the fully open and fully closed positions.

4.16 FO valves of nominal size ≥ DN 200 mm (8") and RO valves of nominal size ≥ DN 250 mm (10") shall be equipped with support foot and lifting lugs. Tapped holes and eye bolts shall not be used for lifting lugs. Height of support foot shall be kept a minimum. The location and size of support foot / lifting lugs shall ensure unrestrictive operation of vent / drain valves.

4.17 Valve design shall be such as to avoid bimetallic corrosion between carbon steel and high alloy steel components. Suitable insulation shall be provided as required.

4.18 Valves shall be of fire resistant design as per API 607/BS EN ISO 10497/API 6FA, as indicated in Valve Data Sheet.

4.19 Valves shall be provided with anti-static devices to ensure electrical continuity between stem / ball and valve body.

4.20 Valves shall be suitable for either buried or above ground installation as indicated in Valve Data Sheet.

4.21 When stem extension requirement is indicated in Valve Data Sheet, the valves shall have the following provisions :

a) Valves provided with stem extension shall have water proof outer casing. Length of stem extension shall be as indicated in Valve Data Sheet. The length indicated corresponds to the distance between centerline of the valve opening and the top of mounting flange for valve operating device (gear operator / power actuator as applicable).

b) Vent and drain connections and sealant injection lines shall be terminated adjacent to the valve operator by means of suitable piping anchored to the valve body. Pipe used shall be API 5L Gr. B / ASTM A 106 Gr. B, with Sch. 80. Fittings shall be ASTM A 105 / ASTM 234 Gr. WPB, Socket Welded, ANSI class 6000.

c) Stem extension and stem housing design shall be such that the complete assembly will form a rigid unit giving a positive drive under all conditions with no possibility of free movement between valve body, stem extension or its operator.

d) Outer casing of stem extension shall have 3/8ò or İ ò NPT plugs at the top and bottom, for draining and filling with oil to prevent internal corrosion.

4.22 **Operating Devices**

a) Valves shall have a power actuator or manual operator as indicated in Valve Data Sheet. In case of manual operator, valve sizes ≤ DN 100 mm (4 inches) shall be wrench operated and valve sizes ≥ DN 150 mm (6 inches) shall be gear operated. Each wrench ï operated valve shall be supplied with wrench. Valve design shall be such that damage due to malfunctioning of the operator or its controls will only occur in the operator gear train or power cylinder and that damaged parts can be replaced without the valve cover being removed.

b) The power actuator shall be in accordance with the Purchaser specification issued for the purpose and as indicated in Valve and Actuator Data Sheet. Operating time shall be as indicated in Valve Data Sheet. Valve operating time shall correspond to full close to full open/full open to full close under maximum differential pressure corresponding to the valve rating. For actuated valves, the actuator torque output shall be 1.25 times the break torque required to operate the ball valve under the maximum differential pressure corresponding to the valve class rating.

c) For manual operator of all valves, the diameter of the hand wheel or the length of operating wrench shall conform to API 6D requirements and be such that under maximum differential pressure, the total force required to operate the valve does not exceed 350 N. Manufacturer shall also indicate the number of turns of hand wheel (in case of gear operators) required for operating the valve from full open to full close position.

d) Direction of operation of hand wheel or wrench shall be in clock-wise direction while closing the valve. Hand wheels shall not have protruding spokes.

e) Gear operators, when provided, shall have a self locking provision and shall be fully encased, in water proof/ splash proof/ dust proof/ weather proof enclosure and shall be filled with suitable grease.

f) Operating devices shall be designed for easy operation of the valve under maximum differential pressure corresponding to the valve rating.

4.23 All welds shall be made by welders and welding procedures qualified in accordance with the provisions of ASME Section IX. The procedure qualification shall include impact test and hardness test and shall meet the requirements of clauses 3.4 and 3.6 of this specification, respectively.

4.24 All welds shall be stress relieved in accordance with ASME Section VIII.

4.25 Repair by welding is not permitted for fabricated and forged body valves. However, repair by welding as per ASME B16.34 is permitted for cast body valves. Such repairs shall be carried out at casting supplier's care only. Repair shall be carried out before any heat treatment of casting is done. Repair welding procedure qualification shall also include impact test and hardness test and shall meet the requirements of clauses 3.4 & 3.6 of this specification, respectively.

4.26 The tolerance on internal diameter and out of roundness at the ends for welded end valves shall be as per applicable connected pipe specification as indicated in Valve Data Sheet.

4.27 When indicated in Material Requisition, valves shall have locking device to lock the valve either in full open (LO) or full close (LC) positions. Locking devices shall be permanently attached to the valve operator and shall not interfere with operation of the valve.

4.28 Valve stem shall be capable of withstanding the maximum operating torque required to operate the valve against the maximum differential pressure corresponding to applicable class rating. The combined stress shall not exceed the maximum allowable stresses specified in ASME Section VIII, Division I. In case of power actuated valves, the valve stem shall be designed for maximum output torque of the selected power actuator (including gear box, if any) at valve stem.

5.0 INSPECTION AND TESTS

5.1 The Manufacturer shall perform all inspection and tests as per the requirements of this specification and the relevant codes, prior to shipment, at his works. Such inspection and tests shall be, but not limited to, the following:

5.1.1 All valves shall be visually inspected. The internal and external surfaces of the valves shall be free from any strikes, gouges and other detrimental defects. The surfaces shall be thoroughly cleaned and free from dirt, rust and scales.

5.1.2 Dimensional check on all valves shall be carried out as per the Purchaser approved drawings.

5.1.3 Chemical composition and mechanical properties shall be checked as per relevant material standards and this specification, for each heat of steel used.

5.1.4 Non-destructive examination of individual valve material and components consisting of, but not limited to castings, forgings, plate and assembly welds shall be carried out by the Manufacturer.

a) Body castings of all valves shall be radiographically examined on 100% of the surface of critical areas as per ASME B16.34. Procedure and acceptance criteria shall be as per ASME B16.34. The extent of radiography shall be as follows:

ANSI Pressure Rating	Valve Size	Extent of Radiography
150 #	All sizes	Nil
300 #	≤ DN 400mm (16ò) ≥ DN 450mm (18ò)	Nil 100%
≥ 600 #	All sizes	100%

All castings shall be wet magnetic particle inspected 100% of the internal surfaces. Method and acceptance shall comply with ASME B.16.34.

b) All valves, with body fabricated from plates or made by forgings, shall be ultrasonically examined in accordance with the procedure and acceptance standard of Annexure E of ASME B16.34.

All forgings shall be wet magnetic particle inspected 100% of the internal surfaces. Method and acceptance shall comply with ASME B 16.34

c) Bodies and bonnets made by welded assembly of segments of castings, forgings, plates or combinations thereof shall be examined, as applicable, by methods of clause 5.1.4 a) for cast components or clause 5.1.4 b) for forged components and plates.

5.1.5 Full inspection by radiography shall be carried out on all welds of pressure containing parts. Acceptance criteria shall be as per ASME B 31.4 or ASME B31.8, as applicable, and API 1104.

5.1.6 Welds, which in Purchaserôs opinion cannot be inspected by radiographic methods, shall be checked by ultrasonic or magnetic particle methods and acceptance criteria shall be as per ASME Section VIII, Division 1, Appendix 12 and Appendix 6, respectively.

5.1.7 a) All finished wrought weld ends subject to welding in field shall be 100% ultrasonically tested for lamination type defects for a distance of 50mm from the end. Laminations shall not be acceptable.

b) Weld ends of all cast valves subject to welding in field shall be 100% radiographically examined and acceptance criteria shall be as per ASME B16.34.

c) After final machining, all bevel surfaces shall be inspected by dye penetrant or wet magnetic particle methods. All defects longer than 6.35 mm are rejected, as are defects between 6.35 mm and 1.59mm that are separated by a distance less than 50 times their greatest length. Rejectable defects must be removed. Weld repair of bevel surface is not permitted.

5.1.8 All valves shall be tested in compliance with the requirements of API 6D. During pressure testing, valves shall not have sealant lines and other cavities filled with sealant, grease or other foreign material. The drain, vent and sealant lines shall be

either included in the hydrostatic shell test or tested independently. Test pressure shall be held for at least 30 minutes. No leakage is permissible during hydrostatic testing. The body cavity self-relieving feature meeting the requirements of clause 4.8 of this specification shall also be checked.

5.1.9 A supplementary air seat test as per API 6D (Annex B, Clause B.3.3, Type II) shall be carried out for all valves. A bubble tight seal is required without the use of any sealant. No leakage is allowed. Test pressure shall be held for at least 15 minutes.

5.1.10 Manufacturer who intends bidding, must submit at bid stage, certificate and report for successful fire type-tests for valves in accordance with API-607/ BS EN ISO 10497 / API 6FA, as applicable in Valve Data Sheet.

Failure to comply with this requirement shall be a cause of rejection of the Bidderôs offer.

5.1.11 Valves shall be subjected to Operational Torque Test as per API 6D (Annex B, Clause B.6) under hydraulic pressure equal to maximum differential pressure corresponding to the valve pressure class rating.

For manual operator of all valves, it shall be established that the force required to operate the valve does not exceed the requirements stated in clause 4.22(c) of this specification.

5.1.12 Power actuated valves shall be tested after assembly of the valve and actuator at the valve Manufacturerôs works. At least five Open-Close-Open cycles without internal pressure and five Open-Close-Open cycles with maximum differential pressure shall be performed on the valve actuator assembly. The time for Full Open to Full close shall be recorded during testing. If required, the actuator shall be adjusted to ensure that the opening and closing times are within the limits stated in Actuator Data Sheet issued for the purpose.

Hand operator provided on the actuator shall also be checked after above testing, for satisfactory manual over-ride performance.

These tests shall be conducted on minimum one valve out of a lot of five (5) valves of the same size, rating and the actuator model / type. In case the tests do not meet the requirements, retesting / rejection of the lot shall be decided by Purchaserôs Inspector.

5.1.13 Subsequent to successful testing as specified in clause 5.1.11 and 5.1.12 above, one (1) valve out of the total ordered quantity shall be randomly selected by the Purchaserôs Representative for cyclic testing as mentioned below :

a) The valve shall be subjected to at least 100 Open-Close-Open cycles with maximum differential pressure corresponding to the valve rating.

b) Subsequent to the above, the valve shall be subjected to hydrostatic test and supplementary air seat test in accordance with clause 5.1.8 and 5.1.9.

In case this valve fails to pass these tests, the valve shall be rejected and two more valves shall be selected randomly and subjected to testing as indicated above. If both valves pass these tests, all valves manufactured for the order (except the valve that failed) shall be deemed acceptable. If either of the two valves fails to pass these tests, all valves shall be rejected or each valve shall be tested at the option of Manufacturer.

Previously carried out test of similar nature shall be considered acceptable if the same has been carried out by Manufacturer in last two years. Valves of two sizes below and two sizes above the size of valve previously tested, and rating similar or one rating lower of valve tested previously, shall be qualified.

5.1.14 Checks shall be carried out to demonstrate that the dissimilar metal used in the valves are successfully insulated as per the requirement of clause 4.17 of this specification.

5.1.15 When indicated in Valve Data Sheet, valves shall be subjected to anti-static testing as per supplementary test requirement of API 6D (Annex B, Clause B.5).

5.2 Purchaser reserves the right to perform stage-wise inspection and witness tests as indicated in clause 5.1 above at Manufacturerôs works prior to shipment. Manufacturer shall give reasonable access and facilities required for inspection to the Purchaserôs Inspector.

Purchaser reserves the right to require additional testing at any time to confirm or further investigate a suspected fault. The cost incurred shall be to Manufacturerôs account.

In no case shall any action of Purchaser or his Inspector relieve the Manufacturer of his responsibility for material, design, quality or operation of valves.

Inspection and tests performed/ witnessed by the Purchaserôs Inspector shall in no way relieve the Manufacturerôs obligation to perform the required inspection and tests.

6.0 EXTENT OF INSPECTION & TESTING

6.1 Purchaserôs Inspector shall perform inspection and witness tests on all valves or as indicated in the Quality Assurance Plan (QAP) attached with this specification.

6.2 The hydrostatic testing and cyclic opening and closing of the valves with the operator shall be witnessed by Purchaserôs Inspector.

7.0 TEST CERTIFICATES

7.1 Manufacturer shall submit the following certificates:

a) Mill test certificates relevant to the chemical analysis and mechanical properties of the materials used for valve construction as per the relevant standards.

b) Test certificates of hydrostatic and pneumatic tests complete with records of timing and pressure of each test.

c) Test reports on radiograph and ultrasonic inspection.

d) Test report on operation of valves conforming to clause 5.1.11, 5.1.12 and 5.1.13 of this specification.

e) All other test reports and certificates as required by API 6D and this specification.

The certificates shall be valid only when signed by Purchaserõs Inspector. Only those valves which have been certified by Purchaserõs Inspector shall be despatched from Manufacturerõs works.

8.0 PAINTING, MARKING & SHIPMENT

8.1 Valve surface shall be thoroughly cleaned, freed from rust and grease and applied with sufficient coats of corrosion resistant paint. Surface preparation shall be carried out by shot blasting to SP-6 in accordance with õSteel Structures Painting Council ï Visual Standard SSPC-VIS-1ò. For valves to be installed underground, when indicated in Valve Data Sheet, the external surfaces of the buried portion of valves shall be painted with three coats of suitable coal tar epoxy resin with a minimum dry film thickness of 300 microns.

8.2 Manufacturer shall indicate the type of corrosion resistant paint used, in the drawings submitted for approval.

8.3 All valves shall be marked as per API 6D. The units of marking shall be metric except Nominal Diameter which shall be in inches. Marking shall be done by die-stamping on the bonnet or on the housing. However, for buried valves, the marking shall be done on the above ground portion of the stem housing only.

8.4 Valve ends shall be suitably protected to avoid any damage during transit. All threaded and machined surfaces subject to corrosion shall be well protected by a coat of grease or other suitable material. All valves shall be provided with suitable protectors, for flange faces, securely attached to the valves. Bevel ends shall be protected with metallic or high impact plastic bevel protectors.

8.5 All sealant lines and other cavities of the valve shall be filled with sealant before shipment.

8.6 Packaging and shipping instructions shall be as per API 6D.

8.7 On packages, following shall be marked legibly with suitable marking ink :

a) Order Number
b) Manufacturer's Name
c) Valve Size and Rating
d) Tag Number
e) Serial Number

9.0 SPARES & ACCESSORIES

9.1 Manufacturer shall furnish list of recommended spares and accessories for valves required during start-up and commissioning and supply of such spares shall be included in the price quoted by Manufacturer.

9.2 Manufacturer shall furnish list of recommended spares and accessories required for two years of normal operation and maintenance of valves and price for such spares shall be quoted separately.

9.3 Manufacturer shall quote for spares & accessories as per Material Requisition.

10.0 DOCUMENTATION

10.1 At the time of bidding, Manufacturer shall submit the following documents:

a) General arrangement / assembly drawings showing all features and relative positions and sizes of vents, drains, gear operator / actuator, painting, coating and other external parts together with overall dimensions as well as weights of valve & actuator.

b) Sectional drawing showing major parts with reference numbers and material specification. In particular, a blow-up drawing of ball-seat assembly shall be furnished complying the requirement of clause 4.6 of this specification.

c) Reference list of similar ball valves manufactured and supplied in last five years indicating all relevant details including project, year, client, location, size, rating, service, etc.

d) Torque curves for the power actuated valves along with the break torque and maximum allowable stem torque. In addition, sizing criteria and torque calculations shall also be submitted for power actuated valves.

e) Descriptive technical catalogues of the Manufacturer.

f) Copy of valid API 6D certificate.

g) Details of support foot, including dimensions and distance from valve centre line to bottom of support foot.

h) Quality Assurance Plan enclosed with this tender duly signed, stamped and accepted.

i) List of recommended spares required during start-up and commissioning.

j) List of recommended spares required for 2 years of normal operation and maintenance.

k) Other documents / drawings / data as per Material Requisition.

10.2 Within two weeks of placement of order, the Manufacturer shall submit six copies of, but not limited to, the following drawings, documents and specifications for Purchaserôs final approval :

a) Detailed sectional arrangement drawings showing all parts with reference numbers and material specifications as referred to in clause 10.1 above.

b) Assembly drawings with overall dimensions and features. Drawing shall also indicate the number of turns of hand wheel (in case of gear operators) required for operating the valve from full open to full close position and the painting scheme. Complete dimensional details of support foot (where applicable) shall be indicated in these drawings as referred to in clause 10.1 above.

c) Welding, heat treatment and testing procedures.

d) Procedure for cyclic testing.

e) Details of corrosion resistant paint to be applied on the valves.

f) Design calculation for pressure containing parts.

g) Other documents / drawings / data as per Material Requisition.

Manufacture of valves shall commence only after approval of the documents indicated in clause 10.2a) to 10.2c) above. Once approval has been given by Purchaser, any changes in design, material and method of manufacture shall be notified to Purchaser whose approval in writing of all changes shall be obtained before the valve is manufactured.

10.3 Within 2 weeks from the approval date, Manufacturer shall submit to Purchaser six copies of the approved drawings, documents and specifications as listed in clause 10.2 above.

10.4 Prior to shipment, Manufacturer shall submit six hard copies and six soft copies (on CD-ROMs) of the following:

a) Test certificates as per clause 7.0 of this specification.

b) Manual for installation, erection, maintenance and operation instructions, including a list of recommended spares for the valves.

c) Other documents / drawings / data as per Material Requisition.

10.5 All documents shall be in English language.

10.6 **The above documents & data requirements shall also be supplemented by all requirements of clause 2.0 of the Material Requisition.**

11.0 GUARANTEE

11.1 Manufacturer shall guarantee that the materials and machining of valves and fittings comply with the requirements in this specification and in the Purchase Order.

11.2 Manufacturer is bound to replace or repair all valve parts which should result defective due to inadequate engineering or to the quality of materials and machining.

11.3 If valve defect or malfunctioning cannot be eliminated, Manufacturer shall replace the valve without delay,

11.4 Any defect occurring during the period of Guarantee shall be attended to by making all necessary modifications and repair of defective parts free of charge to the Purchaser as per the relevant clause of the bid document.

11.5 All expenses shall be to Manufacturer's account.

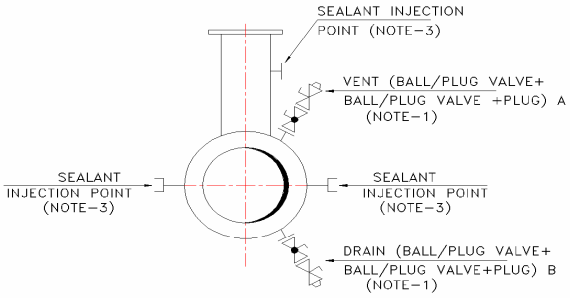

ABOVE GROUND INSTALLATION

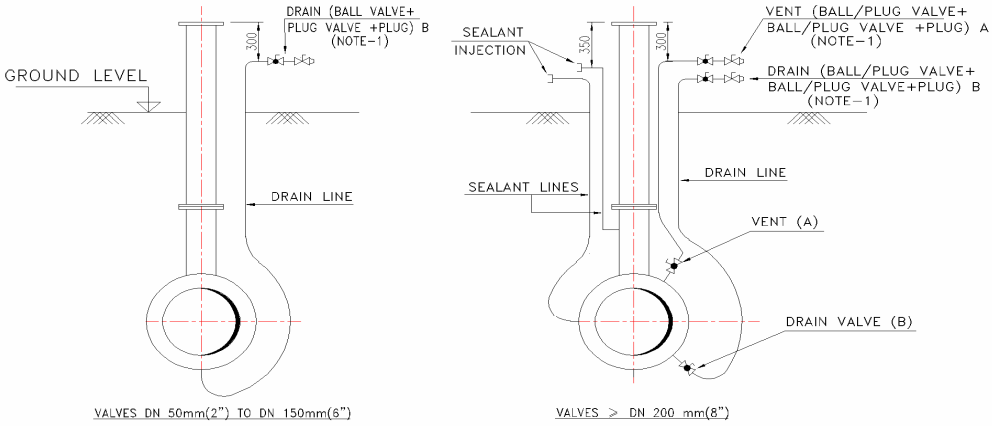

UNDERGROUND INSTALLATION

SIZES OF VENT & DRAIN CONNECTIONS		
NOM. VALVE SIZE	A, DN(mm)	B, DN(mm)
50 TO 150	–	15
200 TO 600	15	25
750 & ABOVE	15	50 (REFER NOTE-2)

LEGEND:

- BALL VALVE
- PLUG VALVE
- PLUG

NOTES:

1. ALL VALVES (BALL OR PLUG) AND PLUGS FOR A AND B SHALL BE APPROVED BY THE PURCHASER.
2. VALVES OF SIZE 50mm SHALL BE MANUFACTURED AS PER API-6D.
3. SEALANT INJECTION POINTS SHALL BE PROVIDED FOR FULL OPENING VALVES OF NOMINAL VALVE SIZE 200mm (8") & ABOVE AND REDUCED OPENING VALVES OF NOMINAL VALVE SIZE, DN 250mm (10") AND ABOVE ONLY.
3. IN BURIED SECTION, ALL VENT & DRAIN CONNECTION SHALL BE OF WELDED CONSTRUCTION.

FIGURE-1

VENT, DRAIN & SEALANT INJECTION DETAILS

PROCESS & PIPING DESIGN SECTION
MECON LIMITED

DELHI - 110 092

TECHNICAL SPECIFICATION
FOR
PLUG VALVES
(NB $\geq$ 2)

SPECIFICATION NO.: MEC/TS/05/62/003, Rev-2

CONTENTS

Sl.No.	Des ription	Page No.
1.0	SCOPE	2
2.0	REFERENCE DOCUMENTS	2
3.0	MATERIALS & TEST PROCEDURES	3
4.0	DESIGN & CONSTRUCTION	4
5.0	INSPECTION & TESTS	7
6.0	EXTENT OF INSPECTION & TESTING	9
7.0	TEST CERTIFICATES	9
8.0	PAINTING, MARKING & SHIPMENT	10
9.0	SPARES & ACCESSORIES	10
10.0	DOCUMENTATION	11
11.0	GUARANTEE	12

PREPARED BY :	CHECKED BY :	APPROVED BY :
Gurdeep Singh	A.K. Sar ar	A.K. Johri
Date	Date	Date

1.0 SCOPE

This specification covers the minimum requirements for design, manufacture and supply of carbon steel plug valves of size DN 50mm (2) and above and ANSI Class 150 thru 900 for use in onshore pipeline systems handling non sour hydrocarbons in liquid phase or gaseous phase including Liquefied Petroleum Gas (LPG).

2.0 REFERENCE DOCUMENTS

2.1 All valves shall be manufactured and supplied in accordance with the Twenty Second Edition, January, 2002, or the latest edition of American Petroleum Institute (API) Specification 6D, twenty first edition, 1994 including supplement 1 & 2 thereof with additions and modifications as indicated in the following sections of this specification.

2.2 Reference has also been made in this specification to the latest edition of the following Codes, Standards and Specifications :

ASME B 16.5	:	Pipe flanges and flanged fittings
ASME B 16.25	:	Buttwelding ends
ASME B 16.34	:	Valves Flanged, threaded and welding end
ASME B16.47	:	Large diameter steel flanges
ASME B 31.3	:	Chemical & process plant piping system
ASME B 31.4	:	Liquid transportation systems for hydrocarbons and other liquids
ASME B 31.8	:	Gas transmission and distribution piping systems
ASME Sec.VIII	:	Boiler and pressure vessel code
ASTM A 370	:	Standard test methods and definitions for mechanical testing of steel products
ASTM B 733	:	Autocatalytic nickel phosphorous coating on metals
API 6FA	:	Fire test for valves
API 1104	:	Welding of pipelines and related facilities
BS:6755 (Part-II)	:	Testing of valves Specification for fire type - testing requirements
MSS-SP-6	:	Standard finishes for contact faces of pipe flanges and connecting-end flanges of valves and fittings

MSS-SP-44 : Steel pipeline flanges

SSPC-VIS-1 : Steel structures painting council-visual standard

2.3 **In ase of onfli t** between the requirements of this specification, API 6D and the Codes, Standards and Specifications referred in clause 2.2 above, the requirements of this specification shall govern. Order of precedence shall be as follows :

- Data Sheets
- This Specification
- API 6D Specification
- Other Referred Codes & Standards
- Manufacturer's Standard

3.0 MATERIALS & TEST PROCEDURES

3.1 Material for major components of the valves shall be as indicated in Valve Data Sheet. Other components shall be as per Manufacturer s standard which will be subject to approval by Purchaser.

3.2 Carbon steel used for the manufacture of valves shall be fully killed.

3.3 Chemical composition (check analysis) of valve end connection which are subject to further welding by Purchaser shall meet the following requirements for each heat of steel used:

a) Carbon : 0.22 (max.)
b) Manganese : 1.70 (max.)
c) Silicon : 0.55 (max.)
d) Phosphorus : 0.030 (max.)
e) Sulphur : 0.030 (max.)

Total percentage of Vanadium, Niobium and Titanium shall not exceed 0.20. Residual elements shall not exceed the following limits :

a) Nitrogen : 0.019
b) Nickel : 0.30
c) Copper : 0.20
d) Aluminum : 0.070
e) Chromium : 0.15
f) Molybdenum : 0.05

Carbon equivalent (CE) as calculated by the following shall not exceed 0.45 .

$$CE = C + \frac{Mn}{6} + \frac{Cr + Mo + V}{5} + \frac{Ni + Cu}{15}$$

3.4 For valves specified for Gas Service or high vapour pressure liquid service, charpy V-Notch test on each heat of base material shall be conducted as per API 6D, for all pressure containing parts such as body, end flanges and welding ends as well as the bolting material for pressure containing parts. Unless specified otherwise in Valve Data Sheets, the Charpy impact test shall be conducted at 0 C. The Charpy impact test specimen shall be taken in the direction of principal grain flow and notched perpendicular to the original surface of plate or forging.

Unless specified otherwise in Valve Data Sheets, the minimum average absorbed energy per set of three specimens shall be 27 J with an individual minimum per specimen of 22 J.

3.5 For valves specified for Gas Service or high vapour pressure liquid service, the hardness of base material of body and principal parts of the valve such as plug, stem, etc., shall not exceed 22 RC.

3.6 Plug for valve size DN 200mm (8) and above or as specified in Valve Data Sheets shall have Electroless Nickel Plating (ENP) or equivalent. The hardness of plating shall be minimum 50 RC. Manufacturer shall ensure that the adhesive strength of plating is sufficient so as to prevent peeling of plating during operation of the valve.

3.7 All process-wetted parts, metallic and non-metallic, shall be suitable for the fluids and service specified by the Purchaser. The service gas composition when applicable shall be as given in Annexure-I.

4.0 DESIGN & CONSTRUCTION

4.1 The Manufacturer shall have a valid license to use API 6D monogram for manufacture of Plug Valves.

4.2 Valve pattern shall be short, regular or venturi as specified in the following table:

Class	Si e Range, NB mm (in h)	Pattern
150	50-100 (2-4)	Short
	150-300 (6-12)	Regular
	350 (14) & above	Venturi
300	50-100 (2-4)	Short
	150-250 (6-10)	Regular
	300 (12) & above	Venturi
600	50-250 (2-10)	Regular
	300 (12) & above	Venturi
900	50-250 (2-10)	Regular
	300 (12) & above	Venturi

4.3 Valve shall have an inherent feature using line pressure to ensure that the line pressure cannot cause taper locking of the plug/ plug movement into taper i.e. valves shall be of pressure balanced design.

4.4 Cover shall be bolted to the body and screwed connections are not acceptable.

4.5 Soft seats to achieve a seal between plug and body are not permitted.

4.6 All valves shall have provisions for secondary sealant injection under full line pressure for seat and stem seals. Sealant injection points shall be provided with a ball type check valve or needle valve to replace the sealant injection fitting under full line pressure.

4.7 Valves shall have vent and drain connections as per API 6D.

4.8 When specified in the Valve Data Sheet, valves shall be designed to withstand a sustained internal vacuum of at least one milli-bar in both open and closed position.

4.9 Valve design shall ensure repair of gland packing under full line pressure.

4.10 a) Valve ends shall be either flanged or butt welded or one end flanged and one end butt welded as indicated in Valve Data Sheet. Flanges of the flanged end cast/ forged body valves shall be integrally cast/forged with the body of valve. Face-to-face/ end-to-end dimensions shall conform to API 6D.

b) Flanged end shall have dimensions as per ASME B16.5 for valve sizes upto DN 600mm (24 inches) excluding DN 550mm (22 inches) and as per MSS-SP-44 for valve sizes DN 550mm (22 inches) & for DN 650mm (26 inches) and above. Flange face shall be either raised face or ring joint type as indicated in Valve Data Sheet. Flange face finish shall be serrated or smooth as indicated in Valve Data Sheet. Smooth finish when specified shall be 125 to 200 AARH. In case of RTJ flanges, the groove hardness shall be minimum 140 BHN.

c) Butt weld end preparation shall be as per ASME B16.25. The thickness of the pipe to which the valve has to be welded shall be as indicated in Valve Data Sheet. Valves shall be without transition pups. In case significant difference exists between thickness of welding ends of valve and connecting pipe, the welding ends of valve shall have bevel preparation as per ASME B31.4 or ASME B31.8, as applicable.

4.11 Valves shall be provided with position indicator and stops at the fully open and fully closed positions.

4.12 Valves of size DN 200mm (8) and above shall be equipped with lifting lugs. Tapped holes and eye bolts shall not be used for lifting lugs.

4.13 Valves shall have locking devices to be locked either in full open or full close position when indicated in the Valve Data Sheets. Locking devices shall be permanently attached to the valve operator and shall not interfere with operation of the valve.

4.14 Valves shall be of fire safe design as per BS:6755 (Part-II)/ API 6FA, if indicated in Valve Data Sheet.

4.15 Valves shall be suitable for either buried or above ground installation as indicated in the Valve Data Sheet.

4.16 Valves with stem extension, when indicated in Valve Data Sheet shall have following provisions :

a) Valves provided with stem extension shall have water proof outer casing. Length of stem extension shall be as indicated in the Valve Data Sheet. The length indicated corresponds to the distance between the centreline of the valve opening and the top of the mounting flange for valve operating device (gear operator/ power actuator as applicable).

b) Vent and drain connections shall be terminated adjacent to the valve operator by means of suitable piping anchored to the valve body. Pipe used shall be API 5L Gr. B/ ASTM A106 Gr. B, with Sch. 160. Fittings shall be ASTM A105/ ASTM A 234 Gr. WPB, Socket Welded, ANSI class 6000.

c) Sealant injection lines shall be extended and terminated adjacent to the valve operator in manner as indicated in (b) above.

d) Stem extension and stem housing design shall be such that the complete assembly will form a rigid unit giving a positive drive under all conditions with no possibility of free movements between valve body stem extension or its operator.

e) Outer casing of stem extension shall have 3/8 or NPT plugs at the top and bottom, for draining and filling with oil to prevent internal corrosion.

4.17 **Operating Devi es**

a) Valves shall have a power actuator or manual operator as indicated in the Valve Data Sheet. Manual operated valves of size _ DN 100mm (4) shall be wrench operated and valves of sizes _ DN 150mm (6) shall be gear operated. Each wrench operated valve shall be supplied with wrench. Valve design shall be such that damage due to malfunctioning of the operator or its controls will only occur in the operator gear train or power cylinder and damaged parts can be replaced without the bonnet being removed.

b) The power actuator shall be in accordance with the specification issued for the purpose and as indicated in the valve and actuator data sheet. Operating time shall be as indicated in valve data sheet. Valve operating time shall correspond to full close to full open / full open to full close under maximum differential pressure corresponding to the valve rating. For actuated valves, the actuator torque shall be atleast 1.25 times the maximum torque required to operate the valve under maximum differential pressure corresponding to the valve class rating.

c) Operating device shall be designed for easy operation of valve under maximum differential pressure corresponding to the valve rating.

d) For manual operation of all valves, the diameter of the hand wheel or the length of operating lever shall be such that under the maximum differential pressure, the total force required to operate the valve does not exceed 350 N. Manufacturer shall also indicate the number of turns of hand wheel (in case of gear operator), required to operate the valve from full open to full close position.

e) Direction of operation of hand wheel or wrench shall be in clock-wise direction while closing the valve. Hand wheels shall not have protruding spokes.

f) Gear operators, if specified, shall have a self locking provision and shall be fully encased in waterproof/ dustproof/ weatherproof/ splashproof enclosure and shall be filled with suitable grease.

4.18 Repair by welding is not permitted for fabricated and forged body valves. However repair by welding as per ASME B16.34 is permitted for cast body valves. Repair shall be carried out before any heat treatment of casting is done. Repair welding procedure qualification shall also include impact test and hardness test when required as per Clause 3.4 and 3.6 of this specification and shall meet the requirements as specified therein.

4.19 The tolerance on internal diameter and out of roundness at the ends for welded ends valves shall be as per connected pipe specification as indicated in the Valve Data Sheet.

4.20 Valve stem shall be capable of withstanding the maximum operating torque required to operate the valve against the maximum differential pressure corresponding to applicable class rating. The combined stress shall not exceed the maximum allowable stresses specified in ASME section VIII, Division-1.

For Power Actuated Valves, the valve stem shall be designed for maximum output torque of the selected power actuator (including gear box, if any) at the valves stem.

5.0 INSPECTION & TESTS

5.1 The Manufacturer shall perform all inspection and tests as per the requirements of this specification and the relevant codes, prior to shipment at his works. Such inspection and tests shall be, but not limited to, the following :

5.1.1 All valves shall be visually inspected.

5.1.2 Dimensional check shall be carried out as per the Purchaser approved drawings.

5.1.3 Chemical composition and mechanical properties shall be checked as per relevant material standards and this specification, for each heat of steel used.

5.1.4 a) Non-destructive examination of individual valve material and component consisting of but not limited to castings, forgings, plates and assembly welds shall be carried out by the Manufacturer.

b) Valves castings shall be radiographically examined at the cover and body portion, seat location, flanged body ends and circumference of ends to be field welded. Procedure and acceptance criteria shall be as per ASME B16.34. The extent of radiography shall be as follows :

ANSI Class 150-	All Sizes	-	Nil
ANSI Class 300-	≤ DN 400mm (16)	-	Nil
	≥ DN 450mm (18)	-	100
ANSI Class 600- and above	All Sizes	-	100

All castings shall be wet magnetic particle inspected 100 of the internal surfaces. Method and acceptance shall comply with ASME B16.34.

c) Valve forgings shall be examined by ultrasonic method. Inspection procedure and acceptance criteria shall be as per Annexure E of ASME B16.34.

5.1.5 Areas which, in Purchaser s Inspector's opinion, cannot be inspected by radiographic methods shall be checked by ultrasonic or magnetic particle methods and acceptance criteria shall be as per ASME Sec-VIII, Division I, Appendix 12 and Appendix 6 respectively.

5.1.6 a) Weld ends of all cast valves shall be 100 radiographically examined and acceptance criteria shall be as per ASME B16.34.

b) After final machining all bevel surfaces shall be inspected by dye penetrant, or wet magnetic particle methods. Any defects longer than 6.35mm shall be rejected and also defects between 6.35mm and 1.59mm that are separated by a distance less than 50 times their greatest length. Weld repair of bevel surface is not permitted. Rejectable defects must be removed.

c) All finished wrought weld ends subject to welding in the field shall be 100 ultrasonically tested for lamination type defects for a distance of 50mm from the end. Laminations shall not be acceptable.

5.1.7 All valves shall be tested in compliance with the requirements of API 6D. Hydrostatic shell testing shall ensure that the whole of the shell is subjected to the test pressure. If necessary, the empty shell shall be pressure tested prior to assembly of the plug. The drain, vent and sealant lines shall be either included in the hydrostatic shell test or tested independently. No leakage is permissible during hydrostatic testing.

5.1.8 A supplementary air seat test as per API 6D shall be carried out for all valves. No leakage is allowed. Test pressure shall be held for at least 15 minutes.

5.1.9 Manufacturer who intends bidding must submit at bid stage, certificate and report for successful fire safe tests for all types of valves in accordance with BS:6755 (Part-II)/ API 6FA, as applicable in Valve Data Sheet.

Failure to comply with the requirement shall be a cause of rejection of the offer.

5.1.10 Valve shall be subjected to Operational Torque Test as per supplementary test requirement of API 6D under hydraulic pressure equal to the maximum differential pressure corresponding to the valve rating. The maximum handwheel force shall not exceed 350 N.

5.1.11 Power actuated valves shall be tested after assembly at the valve Manufacturer s works. Actuator shall be capable to allow minimum five consecutive opening and closing cycles. To achieve this, the Manufacturer shall provide closing and opening operations. This test shall be conducted on one valve out of a lot of five valves of the same size, rating and actuator type. In case the test result dose not meet the requirements, retesting/ rejection of the lot shall be as decided by Purchaser s Inspector.

The actuator shall be adjusted to ensure that opening and closing time is within the limits stated in Actuator Data Sheet issued for the purpose.

The hand operator installed on the actuator shall also be checked after the cyclic testing, for satisfactory manual over-ride performance.

5.2 Purchaser reserves the right to perform stagewise inspection and witness tests as indicated in para 5.1 at Manufacturer s works prior to shipment. Manufacturer shall give reasonable access and facilities required for inspection to Purchaser s Inspector.

Purchaser reserves the right to request additional testing at any time to confirm or further investigate a suspected fault. If the suspected fault is confirmed, the cost incurred shall be to Manufacturer s account.

In no case shall any action of Purchaser or his representative relieve the Manufacturer of his responsibility for material, design, quality or operation of valves.

Inspection and tests performed/ witnessed by the Purchaser s Inspector shall in no way relieve the Manufacturer s obligation to perform the required inspection and tests.

6.0 E TENT OF INSPECTION & TESTING

6.1 Purchaser s Inspector shall perform inspection and witness test on all valves as indicated in the uality Assurance Plan (AP) attached with this specification.

6.2 The hydrostatic testing and cyclic opening and closing of the valves with the operator shall be witnessed by Purchaser s Inspector.

7.0 **TEST CERTIFICATES**

7.1 Manufacturer shall submit the following certificates :

a) Mill test certificates relevant to the chemical analysis and mechanical properties of the materials used for valve construction as per the relevant standards.

b) Test certificates on hydrostatic and pneumatic test complete with records of timing and pressure of each test.

c) Test reports conforming to clause 5.1.9 of this specification, if applicable.

d) Test reports on radiographic and ultrasonic inspection.

e) Test reports on operation of valves conforming to clause 5.1.10 and 5.1.11 of this specification.

f) All other test reports and certificates as required by API 6D and this specification.

The certificates shall be valid only when signed by Purchaser s Inspector. Only those valves which have been certified by Purchaser's Inspector shall be dispatched from Manufacturer s works.

8.0 **PAINTING, MARKING & SHIPMENT**

8.1 Valve surface shall be thoroughly cleaned, freed from rust and grease and applied with sufficient coats of corrosion resistant paint. Surface preparation shall be carried out by shot blasting to SP 6 in accordance with Steel Structures Painting Council - Visual Standard - SSPC-VIS-1 . For the valves to be installed underground, when indicated in Valve Data Sheet, external surfaces of the buried portion of valves shall be painted with three coats of suitable coal tar epoxy resin with a minimum dry film thickness of 300 microns.

8.2 Manufacturer shall indicate the type of corrosion resistant paint used, in the drawings submitted for approval.

8.3 All valves shall be marked as per API 6D. The units of marking shall be metric except Nominal Diameter which shall be in inches. Marking shall be done by die-stamping on the bonnet or on the housing. However for buried valves the marking shall be done on the above ground portion of the stem housing only.

8.4 Valve ends shall be suitably protected to avoid any damage during transit. All threaded and machined surfaces subject to corrosion shall be well protected by a coat of grease or other suitable material. All valves shall be provided with suitable protectors, for flange faces, securely attached to the valves. Bevel ends shall be protected with metallic bevel protectors.

8.5 All sealant lines and other cavities of the valves shall be filled with sealant before shipment.

8.6 Packaging and shipping instructions shall be as per API 6D.

8.7 Packages shall be marked legibly, with suitable marking ink, the following.

a) Order Number
b) Manufacturer s Name
c) Valve Size and Rating
d) Tag Number
e) Serial Number

9.0 SPARES & ACCESSORIES

9.1 Manufacturer shall recommend and quote separately the spares for valves required for commissioning and two years of normal operation. List of such spares without price shall be indicated alongwith technical bid and separately with price.

9.2 Manufacturer shall recommend and quote unit price separately for the accessories (like wrench, sealant injector, etc.), sealant and special tools required for maintenance of valves.

10.0 DOCUMENTATION

10.1 At the time of bidding, the bidder shall submit the following documents :

a) General arrangement/ assembly drawings showing all features and relative positions & sizes of vents, drains, gear box & other external parts together with overall dimensions.

b) Sectional drawing showing major parts with reference numbers and material specification.

c) Reference list of similar plug valves manufactured and supplied in last five years, indicating all relevant details including project, year, client, location, size rating, service, etc.

d) Torque curves for the power actuated valves alongwith break torque and maximum allowable stem torque. In addition, sizing criteria and torque calculations shall also be submitted for power actuated valves.

e) Descriptive technical catalogues of the Manufacturer.

f) Copy of valid API 6D certificate, wherever applicable.

g) Details of support foot, including dimensions and distance from valve centre line to bottom of support foot.

h) uality Assurance Plan enclosed with this tender duly signed, stamped and accepted.

IMPORTANT

The drawings to be submitted alongwith the bid shall be in total omplian e with the re uirement of te hni al spe ifi ation and data sheets of the valves with no ex eption & deviation.

10.2 Within two weeks of placement of order, the manufacturer shall submit six copies of, but not limited to, the following drawings, documents and specifications for approval :

a) Design drawings and relevant calculations for pressure containing parts and other principle parts.

b) Detailed sectional arrangement drawing showing all parts with reference numbers and materials specification.

c) Assembly drawings with overall dimensions & clearances required and showing all features. Drawing shall also indicate the numbers of turns of handwheel (in case of gear operator) required for operating the valve from full open to full close position and the painting scheme.

d) Welding, heat treatment, testing and quality control procedures.

e) Details of corrosion resistant paint to be applied on the valves.

f) Design calculation for pressure containing parts.

Manufacture of valves shall commence only after approval of the above documents. Once approval has been given by Purchaser, any change in design, material and method of manufacture shall be notified to the Purchaser, whose approval in writing for all changes shall be obtained before the valves are manufactured.

10.3 Within 30 days from the approval date, Manufacturer shall submit one reproducible and six copies of the approved drawings, documents and specification as listed in clause 10.2 of this specification.

10.4 Prior to shipment, Manufacturer shall submit one reproducible and six copies of following :-

a) Test certificates as listed in clause 7.0 of this specification.

b) Manual for installation, erection instructions, maintenance and operation instructions, including a list of recommended spares for the valves.

10.5 All documents shall be in English Language.

11.0 **GUARANTEE**

11.1 Manufacturer shall guarantee that the materials and machining of valves and fittings comply with the requirements in this specification and in the Purchase Order.

11.2 Manufacturer is bound to replace or repair all valve parts which should result defective due to inadequate engineering or to the quality of materials and machining.

11.3 If valve defect or malfunctioning cannot be eliminated, Manufacturer shall replace the valve without delay.

11.4 Any defect occurring during the period of Guarantee shall be attended to by making all necessary modifications and repair of defective parts free of charge to the Purchaser as per the relevant clause of the bid document.

11.5 All expenses shall be to Manufacturer's account.

Edition : 1

SPECIFICATION
FOR
WELDING OF ONSHORE GAS PIPELINES

SPECIFICATION NO.: MEC/S/05/21/02

(OIL & GAS SBU)
MECON LIMITED
DELHI 110 092

CONTENTS

SL.NO.	DESCRIPTION
01.0	SCOPE
02.0	APPLICABLE CODES, STANDARDS & SPECIFICATIONS
03.0	MATERIAL SPECIFICATIONS
04.0	WELDING CONSUMABLES
05.0	E UIPMENT & ACCESSORIES
06.0	WELDING PROCESSES
07.0	BEVEL CLEANING AND BEVEL INSPECTION
08.0	ALIGNMENT AND SPACING
09.0	WEATHER CONDITIONS
10.0	WELDING
11.0	HEAT TREATMENT
12.0	INSPECTION AND TESTING
13.0	REPAIR OF WELDS
14.0	DESTRUCTIVE TESTING OF WELDED JOINT - BUTT WELDS
15.0	ULTRASONIC INSPECTION
16.0	AUTOMATED ULTRASONIC TESTING (AUT)
17.0	RADIOGRAPH

ANNEXURE-I -	ELECTRODE UALIFICATION TEST RECORD
ANNEXURE-II -	STRESS RELIEF HEAT TREATMENT PROCEDURE SPECIFICATION
ANNEXURE-III -	FORMAT FOR WELDING PROCEDURE SPECIFICATION (WPS)
ANNEXURE-IV -	FORMAT FOR PROCEDURE UALIFICATION RECORD (P R)
ANNEXURE-V -	FORMAT FOR MANUFACTURER S RECORD FOR WELDER OR WELDING OPERATOR UALIFICATION TESTS
ANNEXURE-VI -	RADIOGRAPHIC PROCEDURE UALIFICATION RECORD FOR PIPE WELDING
ANNEXURE-VII -	WELDERS IDENTIFICATION CARD
ANNEXURE-VIII -	T PE OF SOURCE AND FILMS TO BE USED FOR RADIOGRAPH

PREPARED BY:	CHECKED BY:	APPROVED BY:	ISSUE DATE :
(Shalini Singh)	(Sunil Kumar)	(A.K. Johri)	Jan. 2009

AMENDMENT STATUS

Sl. No.	Clause / Paragraph / Annexure / Exhibit / Drawing Amended	Page No.	Rev.	Date	By		Verified	
					Name	Sig.	Name	Sig.
1.	General	-	1	06.06.11	Hitesh Manju		Sunil Kumar	

01. SCOPE

This specification stipulates requirements for fabrication of all types of welded joints of carbon steel main pipeline systems covering the pipeline and its facilities, which will include the following:

- All line pipe joints of the longitudinal and circumferential butt welded and socket welded types.
- Branch connections
- Joints in welded/ fabricated piping components.
- Attachments of castings, forgings, flanges and supports to pipes.
- Attachments of smaller connections for vents/ drain pipes and tappings for instrumentation.
- Welded manifold headers and other sub-assemblies.

Note: Any approval accorded to the Contractor shall not absolve him of his responsibilities and guarantees.

02. APPLICABLE CODES, STANDARDS & SPECIFICATIONS

All welding works, equipment for welding, heat treatment, other auxiliary functions and the welding personnel shall meet the requirements of the latest editions of the following codes, standards and specifications as listed below :-

- Code for Gas Transmission and Distribution Piping System (ANSI B31.8).
- Standard for welding of Pipelines and Related Facilities (API 1104).
- Specification for welding Electrodes and Filler Materials (ASME Sec. II C).
- Non Destructive examination (ASME Sec. V).
- Welding and Brazing ualification, ASME Sec. IX.

03. MATERIAL SPECIFICATIONS

- In general carbon steel is used in this specification. The details of material specifications will be given in a welding Specification Chart attached alongwith other project data sheets.
- The CONTRACTOR will keep a record of test certificates of all the materials for the reference of the welding engineer.

04. WELDING CONSUMABLES

The CONTRACTOR shall provide at his own expenses all the welding consumbles necessary for the execution of the job such as electrodes, oxygen, acetylene etc. and the same shall be approved in advance by the Purchaser/ Consultant.

The welding electrodes/ filler wires supplied by the CONTRACTOR shall conform to the class specified in the welding specification chart. The materials shall be of the make approved by the COMPAN .

The electrode shall be suitable for the welding process recommended and base metal used. Physical properties of the welds produced by an electrode recommended for the welding of a particular base metal shall not be lower than the minimum values specified for the base metal unless otherwise specified in Welding Specification Chart and shall correspond to the physical properties of the class of electrode adopted. The choice of electrode shall be made after conducting the required tests on the electrodes as per relevant standards, and shall be the sole prerogative of the COMPAN .

The CONTRACTOR shall submit batch test certificates from the electrode manufacturers giving details of physical and chemical tests carried out by them for each batch of electrode to be used.

Electrode ualification test records shall be submitted as per **Annexure-I** with respect to the electrodes tested by the CONTRACTOR and submitted for approval of the COMPAN , f or each batch of electrode.

All electrodes shall be purchased in sealed containers and stored properly to prevent deterioration. The electrodes removed from the containers (except cellulosic coated electrodes) shall be kept in holding ovens at the temperature recommended by the electrode manufacturer. Ovens shall be used for low hydrogen electrodes only. Out-of-the oven time of electrodes, before they are consumed, shall not exceed the limits recommended by the electrode manufacturer. The electrodes shall be handled with care to avoid any damage to the flux covering.

The electrodes used shall be free from rust, oil grease, earth and other foreign matter which affect the quality of welding.

Different grades of electrodes shall be stored separately. Cellulosic electrodes used shall however be used as per specific recommendations of manufacturer.

04.01 Shielding Gas

The composition and purity of shielding gas when required by the welding processes other than shielded metal arc welding, when permitted by the COMPAN , shall have prior approval of the COMPAN . Where appropriate, gases or gas mixture of the following quality shall be used.

a) argon complying with BS 4365

b) carbon dioxide complying with type 1 specified in BS 4105
c) gas mixture that have been proved to be satisfactory as a result of procedure approval tests.

When a gas mixture is used which has specified additions, e.g. 2 O_2, 5 CO_2 the variation of such addition shall not exceed 10 of that stated. Moisture content shall correspond to a dew point of - 30°C or lower.

05. EQUIPMENT & ACCESSORIES

5.1 The CONTRACTOR shall have sufficient number of welding and cutting equipment, auxiliaries and accessories of sufficient capacities to meet the target schedule.

5.2 All the equipment for performing the heat treatment including transformers, thermocouples, pyro-meters, automatic temperature recorders with suitable calibration arrangements, etc. shall be provided by the CONTRACTOR, at his own expenses and these shall bear the approval of the COMPAN . Adequate means of measuring current and voltage shall be available.

5.3 Redoing of any work necessitated by faulty equipment or operation used by the CONTRACTOR, will be done at his own expense.

06. WELDING PROCESSES

6.1 Welding of various materials under this specification shall be carried out using following process.

6.1.1 Main line (24 ϕ & above API 5L Gr. X-70, PSL-2)

Welding shall be carried out by automatic or semi automatic welding process.

6.1.2 Main line (24 ϕ & above API 5L Gr. X-80, PSL-2)

Welding shall be carried out by automatic welding process. When welding is carried out only from outside, copper backing shall be used at the root side.

6.2 Tie-Ins and Crossings

Shielded Metal Arc Welding and Semi-automatic Flux Cored Arc Welding shall be used for tie-ins and crossings.

6.3 Any deviation desired by the Contractor shall be obtained through the written consent of the Company.

Following agencies for Automatic Welding Systems are acceptable:

a) CRC-Evans Automatic Welding Systems, Houston
b) Pipe Welding Technology, Italy

c) RMS Welding Systems, Canada
d) Sermier Dasa, France

In case, the bidder proposes to employ any other agency, the proposed agency shall meet the qualification criteria mentioned in the following paragraph and shall submit necessary documentation meeting the criteria. The detailed system description and the procedure shall be submitted to the COMPAN for evaluation and approval

Automatic welding systems and agencies who have proven track record of high productivity with satisfactory quality of weld and have done a single project of diameter 20 or above for a minimum length of 50 km and for a cumulative length of 500 km or above on large diameter Pipe lines in the last ten years shall only be accepted. CONTRACTOR shall engage only such automatic welding systems and agencies for the work to be covered by main line automatic welding. The track record shall be submitted to the COMPAN for approval prior to engagement .

6.4 The welding specification charts specifically developed for welding of the pipeline under this project shall be followed. The welding procedure adopted and the consumables used shall be specifically approved.

6.5 A combination of different welding processes or a combination of electrodes of different classes/ makes could be employed for a particular joint only after qualifying the welding procedures to be adopted and obtaining the approval of the COMPAN .

07. BEVEL CLEANING AND BEVEL INSPECTION

Line pipe supplied by COMPAN shall have bevel ends as specified in the applicable specification for Line Pipe attached with the Bid Package. Any modification thereto, if required by CONTRACTOR due to his special welding technique shall be carried out by the CONTRACTOR at his own cost.

Before welding, all rust and foreign matter shall be removed from the bevelled ends by power operated tools. This shall be effected inside and outside and for a minimum distance of 25mm from the edge of the weld bevel. The bevels shall be thoroughly inspected at this stage. If any of the ends of the pipe joints are damaged to the extent that, in the opinion of COMPAN , satisfactory weld spacing cannot be obtained and local repair by grinding cannot be successfully done, the damged ends shall be cut and re-bevelled to the satisfaction of the COMPAN , with an approved bevelling machine. Manual cutting and weld repairs of bevels is not allowed. Should laminations, split ends or inherent manufacturing defects in the pipe be discovered, the lengths of pipe containing such defects shall be removed from the line to the satisfaction of COMPAN . On pipes which have been cut back, a zone extending 25mm back from the new field bevel, shall be ultrasonically tested to the requirement of the line pipe specification to ensure freedom from laminations. The new bevel shall be subjected to 100 visual and 100 dye penetrant/ MPI tests. A report shall be written for all testing and records kept.

08. ALIGNMENT AND SPACING

Immediately prior to line-up CONTRACTOR shall inspect the pipe ends inside and outside for damage, dents, laminations etc. Pipe for welding shall be set up, correctly spaced, allowing for temperature changes during welding, in correct alignment and shall in no circumstances be sprung into position. Temporary attachments of any kind shall not be welded to the pipe. Welds joining the sections of the pipelines, valve installation or similar welds classified as tie-in welds shall be made in the trench. Otherwise the alignment and welding shall be made alongside the ditch with the pipe supported on skids and back pad or other suitable means approved by COMPAN , at least 500mm above the ground, unless approved by the COMPAN in specific cases.

Seam orientation of welded pipe shall be selected to ensure that at the circumferential welds, the longitudinal welds shall be staggered in the top 90° of the pipeline, or 250mm whichever is the lesser. A longitudinal joint shall pass an appurtenance of a structural element at a minimum distance of 50mm. Should a section of the line containing uncompleted welds fall from the skids, the CONTRACTOR shall immediately inform COMPAN .

Every effort shall be made to reduce misalignment by the use of the clamp and rotation of the pipes to obtain the best fit. For pipe of same nominal wall thickness off-set shall not exceed 1.6mm. The off set may be checked from outside using dial gauges. Any branch connection, sleeve, etc. shall be atleast 150mm from any other weld. The welds for fittings shall be so located that the toe of the weld shall not come within 50 mm of any other weld. Cold dressing is permissible only in cases of slight misalignment and may only be carried out with a bronze headed hammer. Hot dressing shall not be permitted. When welding pipes of different wall thickness (as directed by COMPAN) a special transition piece shall be used. This shall have a minimum of 1:4 taper. The welds shall be subject to both ultrasonic and radiographic inspection.

The root gap shall be accurately checked and shall conform to the qualified welding procedure. The use of internal line-up clamps is mandatory for pipe diameters 10 and above. However, in some cases (tie-in welds, flanges, fittings, diameter of pipe 10 etc.) where it is impossible to use internal clamps, an external line-up clamp may be used.

The internal line-up clamp shall not be released before the entire root pass has been completed.

When as external line-up clamp is used, all spaces between bars or atleast 60 of the first pass shall be welded before the clamp is released and the pipe remaining adequately supported on each side of the joint.

Segments thus welded shall be equally spaced around the circumference of the pipe. Slag, etc. shall be cleaned off and the ends of the segments shall be prepared by grinding, so as to ensure continuity of the weld bead.

09.0 WEATHER CONDITIONS

The parts being welded and the welding personnel shall be adequately protected from rain and strong winds. In the absence of such a protection no welding shall be carried out. The completed welds shall be suitably protected in case of bad weather conditions.

10.0 WELDING

10.1 Root Pass

a) Root pass shall be made with electrodes/ filler wires recommended in the welding specification chart attached along with other project data sheets. The size of the electrodes used shall be as per the approved welding procedure.

b) Position or roll welding (for yard double jointing) may be permitted. Separate procedures shall be submitted and qualified for up hill, down hill, vertical down and roll welding. The vertical up method of welding shall be used for the root pass of the tie-ins, special crossings, fittings and special parts, filled welds, repairs and when an external line up clamp is used. The down hill welding may be used for root run welding of tie-ins and special crossings when (a) the edges are machined or have equivalent preparation (b) line up clamps are used and the fit up is geometrically and mechanically similar to one of the oridinary line welding without misalignment or uneveness.

c) The root pass of butt joints shall be executed properly so as to achieve full penetration with complete fusion of the root edges. Weld projection inside the pipe shall not exceed 1.6 mm wherever not specified by the applicable code.

d) Any deviation desired from the recommended welding technique and electrodes indicated in the welding specification chart shall be adopted only after obtaining express approval of the COMPAN .

e) Welding shall be continuous and uninterrupted during a pass.

f) On completion of each run, craters, welding irreigularities, slag, etc., shall be removed by grinding and chiselling.

g) While the welding is in progress care shall be taken to avoid any kind of movement of the components, shocks, vibration and stresses to prevent occurance of weld cracks.

h) Fillet welds shall be made by shielded metal arc welding process irrespective of the thickness and class of piping. Electrode size shall not exceed 3.25mm diameter for socket joints. Atleast two passes shall be made on socket weld joints

i) Root pass of fillet weld for branch connection can also be made by GTAW process. However other pass shall be made by SMAW process as mentioned above (point h).

j) Peening shall not be used.

10.2 **Joint Completion**

The first pass shall be carried out by a minimum of two welders, working simultaneously and so placed as to cause minimum distortion of the pipe.

The number of welders and the allowable welding sequences shall be as those laid down in the qualified welding procedure specification. Once the deposit of the first pass has been started, it must be completed as rapidly as possible, reducing interruptions to the minimum. The welding and wire speed shall be approximately same as that established in the ualified Welding Procedure Specification (WPS).

The pipe shall always be adequately supported and must not be pumped or shaken during welding. The clamp shall be removed, as indicated in clause 8.0 above. Before starting the second pass, the first pass shall be cleaned and flattened with rotating grinders.

The interruption between completion of the first pass and starting the second pass shall be as stated in the procedure specification.

For crack prevention a top and bottom reinforcement of at least one electrode shall be applied before lowering the pipe on the skid.

The welding speed selected shall enable production of a bead which is sufficiently thick and which shows no undercutting.

The time lapse between second and third pass shall be as stated in the procedure specification, normally not exceeding five minutes. After completion of the third or following passes, welding operations may be suspended, so allowing the joint to cool down, provided that the thickness of the weld metal deposited is equal to at least 50 of the pipe thickness. Upon restarting, depending on the materials, wall thickness and welding process, a preheating to atleast 100°C shall be carried out. Subsequent passes up to weld completion shall be protected to avoid rapid cooling, if meteorological conditions so dictate. Cleaning between passes shall be done carefully so as to reduce the possibility of inclusions.

Electrodes starting and finishing points shall be staggered from pass to pass. Arc-strikes outside the bevel on the pipe surface are not permitted. Arc - strike or arc-burn on the pipe surface outside the weld, which are caused accidentally by electrical arcs between the electrodes, electrode holder, welding cable shall be removed by grinding in accordance with a procedure approved by COMPAN and the repair checked by ultrasonic, radiographic, magnetic particle or dyepenetrant tests which the COMPAN feels necessary. The pipe wall thickness after grinding shall not be less that the minimum thickness limit permitted for the pipe. Repair of arc-strikes by welding is prohibited.

The completed weld shall be carefully brushed and cleaned and shall appear free from spatters, scales, etc.

These requirements apply not only to completed welds but also to the bare strip at least so wide so as to allow full skid examination at both ends of the pipe to allow a good ultrasonic inspection when it is required.

11.0 HEAT TREATMENT

11.1 Preheating

Preheating, if required, shall be carried out as per the following :

a) Preheating requirements for the various materials shall be as per the welding specification chart.

b) Preheating shall be performed using resistance or induction/ heating methods. Preheating by LPG flame with ring burner may be used with the permission of the COMPAN under careful supervision.

c) Preheating shall extend uniformly to atleast three times the thickness of the joint, but not less than 50mm, on both sides of the weld.

d) Preheating temperature shall be maintained over the whole length of the joint during welding. Temperature indicating crayons or other temperature indicating devices shall be provided by the CONTRACTOR to check the temperature.

11.2 Postweld Heat Treatment

a) Post weld heat treatment, wherever required for joints between pipes and fittings, pipe body and supports shall be carried out by the CONTRACTOR at his expense as per the relevant specifications, applicable standards and the instructions of the COMPAN .

b) The heat treatment of welded joints shall be carried out as per the requirements laid down in ANSI B31.8 and other special requirements mentioned in welding specification chart.

c) The CONTRACTOR shall submit for the approval of the COMPAN , well before carrying out actual heat treatments the details of the post weld heat treatment procedure, as per **Annexure-II** attached, that he proposes to adopt for each of the materials/ assembly/ part involved.

d) Post weld heat treatment shall be done in a furnace or by using an electric resistance or induction heating equipment, as decided by the COMPAN .

e) While carrying out local post weld heat treatment, technique of application of heat must ensure uniform temperature attainment at all points of the portion being heat treated. Care shall be taken to ensure that width of heated band over which specified post weld heat treatment temperature is attained is atleat as that specified in the relevant applicable standards/ codes.

The width of the heated band centered on the weld shall at least be equal to the width of weld plus 2 (50mm). The temperature gradient shall be such that the length of the material on each side of the weld, at a temperature exceeding half the heat treatment temperature, is atleast 2.5 rt where is the bore radius and t is the pipe thickness at the weld.

f) Throughout the cycle of heat treatment, the portion outside the heat band shall be suitably wrapped with insulation so as to avoid any harmful temperature gradient on the exposed surface of pipe. For this purpose temperature at the exposed surface of the pipe shall not be allowed to exceed 400°C.

g) The temperature attained by the portion under heat treatment shall be recorded by means of thermocouple pyrometers. Adequate number of thermocouples shall be attached to the pipe directly at equally spaced locations along the periphery of the pipe joint. The minimum number of thermocouples attached per joint shall be 2 upto 10 dia and 3 for 12 dia and above. However, the COMPAN can increase the required minimum number of thermocouples to be attached, if found necessary.

h) Automatic temperature recorders which have been suitably calibrated shall be employed. The calibration chart of each recorder shall be submitted to the COMPAN prior to starting the heat treatment operation and its approval shall be obtained.

i) Immediately on completion of the heat treatment, the post weld heat treatment charts/ records alongwith the hardness test results on the weld joints (whenever required as per the welding specification chart) shall be submitted to COMPAN for its approval.

j) Each joint shall bear an identification number which shall be maintained in the piping sketch to be prepared by the CONTRACTOR. The joint identification number shall appear on the corresponding post weld heat treatment treatment charts. The same identification numbers shall also be followed for identification on corresponding radiographic films. The chart containing the identification number and piping sketch shall be submitted to the COMPAN in suitable folders.

k) Vickers hardness/ Brinnel hardness of the heat affected zone as well as of the weld metal, after heat treatment shall be measured using a suitable hardness tester and shall not exceed the maximum hardness specified in the welding specification chart. The weld joint shall be subjected to reheat treatment, when

hardness measured exceeds the specified limit, at the CONTRACTOR s own expense.

l) The CONTRACTOR shall arrange for the hardness testing and shall maintain the records of all the joints tested. These records shall be checked by the COMPAN .

12.0 INSPECTION AND TESTING

12.1 General

a) The COMPAN s Inspector shall have free access to all concerned areas, where the actual work is being performed. The CONTRACTOR shall be also provide the COMPAN s inspector all means and facilities necessary to carry out inspection.

b) The COMPAN is entitled to depute its own inspector to the shop or field where pre-fabrication and erection of pipelines are being done, with (but not limited to) the following objectives :-

i. To check the conformance to relevant standards/ specifications and suitability of various welding equipment and the welding performance.

ii. To supervise the welding procedures qualification.

iii. To supervise the welder s performance qualification.

iv. To carry out visual/NDT examination of the weldings.

v. To check whether shop/ field welding is being executed is in conformity with the relevant specification and codes of practice followed in pipe construction.

c) CONTRACTOR shall intimate sufficiently in advance the commencement of qualification tests, welding works and acceptance tests, to enable the Company's inspector to be present to supervise the same.

12.2 Welding Procedure Qualification

a) Welding procedure qualification shall be carried out in accordance with the relevant requirements of API 1104 latest edition or other applicable codes and other special requirements of the specification / job requirements by the CONTRACTOR at his expense. The CONTRACTOR shall submit the welding procedure specification chart format as per **Annexure-III** (attached) immediately after the receipt of the order.

b) COMPAN s inspector will review, check and approve the welding procedure submitted and shall release the procedure for procedure qualification tests. The procedure qualification test shall be carried out by the CONTRACTOR under field conditions at his own expense. A complete set of test results in format as per **Annexure-III & Annexure-IV** (attached) shall be submitted to the

COMPAN s Inspector for approval immediately after completing the procedure qualification test and atleast 2 weeks before the commencement of actual work. Standard tests as specified in the code shall be carried out in all cases. In addition to these, tests, other tests like radiography, macro/ micro examination, hardness tests, dye penetrant examination, charphy V-notch etc. shall be carried out on specimens. It shall be the responsibility of the CONTRACTOR to carry out all the tests required to the satisfaction of the COMPAN s Inspector. The destructive testing of welded joints shall be as per Clause 14.0.

12.3 **Welder's Qualification**

a) Welders shall be qualifed in accordance with the API 1104 and other applicable specifications by the CONTRACTOR at his expense. The butt weld test pieces of the qualification test shall meet the radiographic test requirements specified in Clause 12.5 and 16.0 of this specification. The COMPAN s Inspector shall witness the test and certify the qualification of each welder separately. Only those welders who have been approved by the COMPAN s Inspector shall be employed for welding. CONTRACTOR shall submit the welder qualification test reports in the standard format as shown in **Annexure-V** and obtain express approval, before commencement of the work. It shall be the responsibility of CONTRACTOR to carry out qualification tests of welders and obtain written approval, before commencement of works.

b) The welders shall always have in their possession the identification card as shown in **Annexure-VII** and shall produce it on demand by the COMPAN s Inspector. It shall be the responsibility of the CONTRACTOR to issue the identity cards after it has been duly certified by the COMPAN .

c) No welder shall be permitted to work without the possession of identity cards.

d) If a welder is found to perform a type of welding or in a position for which he is not qualified, he shall be debarred from doing any further work. All welds performed by an unqualfiied welder shall be cut and redone by a qualified welder at the expense of the CONTRACTOR.

12.4 **Visual Inspection**

Inspection of all welds shall be carried out by COMPAN as per the latest editions of the applicable codes and specifications. All finished welds shall be visually inspected for parallel and axial alignment of the work, excessive reinforcement, concavity of welds, shrinkage, cracks, under-cuts, dimensions of the weld, surface porosity and other surface defects. Undercutting adjacent to the completed weld shall not exceed the limits specified in the applicable standard/ code.

12.5 **Non Destructive Examination**

12.5.1 The non destructive examination of one hundred percent (100) girth welds will be required by the COMPAN .

The non-destructive examination shall mainly consist of examination using Automated

Ultrasonic Testing (AUT) as detailed in clause no. 16.0. This shall be applicable for all welds made by automatic GMAW process with narrow gap edge preparation and welds made by semi-automatic FCAW process.

The CONTRACTOR shall make all the arrangements for the AUT of work covered by the specification at his expense. The CONTRACTOR shall furnish all the reports to the COMPAN , immediately after examination together with the corresponding interpretation reports on the approved format. The details of the AUT reports along with the joint identification number shall be duly entered in a register and signed by the CONTRACTOR and submitted to the COMPAN for approval. The COMPAN will review all the AUT records of welds and inform the CONTRACTOR to those welds, which are unacceptable. The decision of the COMPAN shall be final and binding in this regard.

For 150 Rating Pipeline, welds shall meet the standards of acceptability as set forth in API 1104. However for higher class rating pipeline welds shall meet the standards of acceptability as set forth in API 1104 and as well as the requirements laid in subsequent paragraphs.

The CONTRACTOR shall make all the arrangements for the NDT work covered by the specification at his expense.

All requirements mentioned in the specification shall be arranged and executed by the CONTRACTOR through his own resources. In addition, Radiography examination shall be required in the following cases as per clause no. 17.0 of this specification :

a) On the first 100 welded joints corresponding to each automatic GMAW welding procedure used.
b) When welds are repaired.
c) When in the opinion of COMPAN , radiography inspection is required to confirm or clarify defects indicated by Ultrasonic examination.
d) Welding of Transition piece of pipe.

In addition, Radiography inspection may be required for certain critical welds of the pipeline, i.e. tie-ins, welding of valves, flanges, randomly selected at COMPAN discretion. All fillet and groove welds, other than those AUT examined, shall be subjected to Dye-Penetrant /MP testing followed by manual Ultrasonic testing.

The non-destructive testing system used for inspecting welds must be approved by the COMPAN .

All other welds and Tie-in joints having API bevel shall be examined by Radiography. When Radiography is used, the provisions stated in this para shall be applicable.

- For all production welds, X-ray Radiography by internal crawlers be used.

Welds shall meet the standards of acceptability as set forth in API 1104 and as well as the requirements laid in subsequent paragraphs.

The CONTRACTOR shall make all the arrangements for the Radiography examination of work covered by the specification at his expense.

The COMPAN will review all the radiographs of welds and inform the CONTRACTOR regarding unacceptable welds. The decision of the COMPAN shall be final and binding in this regard.

All the requirements mentioned in the specification shall be arranged and executed by the CONTRACTOR through his own resources. In addition, Ultrasonic inspection is required in the following cases as per clause no. 15.0 of this specification:

a) On the first 10 welded joints corresponding to each automatic GMAW welding procedures used.
b) When welds are repaired.
c) When in the opinion of COMPAN , Ultrasonic inspection is required to confirm or clarify defects indicated by Radiography.

In addition, Ultrasonic inspection may be required for certain critical welds of the pipeline, i.e. tie-ins, welding of valves, flanges, randomly selected at COMPAN discretion. All fillet and groove welds, other than those are subjected to Radiography, shall be subjected to Dye-Penetrant/MP inspection. The non-destructive testing system used for inspecting welds must by approved by the COMPAN .

Acceptance Criteria

Weld quality is judged on the basis of the acceptability criteria mentioned below:

Any weld which as a result of radiographic and/ or ultrasonic examination in the opinion of COMPAN exhibits imperfections greater than the limits stated in API-1104 latest edition or as superseded in this specification shall be considered defective and shall so be marked with an identification point marker.

In addition to the API-1104 requirements, the welds containing cracks including crater cracks regardless of size of location are unacceptable.

1. Any length of inadequate penetration of the root bead as defined by API-1104 is not acceptable except that root concavity is allowed as per API 1104.
2. Any amount of incomplete fusion at the root of the joint as detailed in API 1104 is considered unacceptable.
3. Unrepaired burn through areas are unacceptable.

Suitable records shall be maintained by the CONTRACTOR as desired by the COMPAN on the day to day work done on welding, radiography, ultrasonic testing. The CONTRACTOR shall present the records to the COMPAN on day to day basis and whenever demanded, for approval.

12.6 **Destructive Testing**

The COMPAN has the authority to order the cutting of upto 0.1 of the total number of welds completed for destructive testing at no extra cost of COMPAN . The destructive testing of weld joints shall be made as per Clause 14.0.

In addition, welds already cut out for defects for any reason may also be subjected to destructive testing. The sampling and the re-execution of welds shall be carried out by the CONTRACTOR at his own expense. If the results are unsatisfactory, welding operations shall be suspended and may not be restarted until the causes have been identified and the CONTRACTOR has adopted measures which guarantee acceptable results. If it is necessary in the COMPAN s opinion the procedure shall be re-qualified. The weld joint represented by unsatisfactory welds shall stand rejected unless investigation prove otherwise.

13.0 REPAIR OF WELDS

13.1 With the prior permission of COMPAN , welds which do not comply with the standards of acceptability shall be repaired or the joint cut out and re-welded.

A separate welding procedure specification sheet shall be formulated and qualified by CONTRACTOR for repair welds simulating the proposed repair to be carried out. Separate procedures are required to be qualified for (a) thorough thickness repair (b) external repair and (c) internal repair. Welders shall be qualified in advance for repairs. The root pass, for repairs opening the root, shall be done by the vertical uphill technique. The procedure shall be proven by satisfactory procedure tests to API 1104 including the special requirement of the specification, and shall also be subject to metalographic examination, hardness surveys and Charpy tests to determine the effects of repair welding on the associated structure.

Root sealing or single pass repair deposit shall not be allowed. Internal root defects shall be ground thoroughly and welded with a minimum of two passes. However, while grinding for repairs, care shall be taken to ensure that no grinding marks are made on the pipe surface anywhere.

The repair shall be subjected, as a minimum requirement to the same testing and inspection requirements as the original weld. The re-radiography of repaired weld shall be limited to 6 weld length on either edge of the repaired area. A 100 ultrasonic test shall be done at the repaired area externally. Any repaired area that is wide, irregular or rough shall be rejected and a full cut out shall be done. Single pass repairs shall be subjected to 100 , Dye-Penetrant / MP testing.

Repairs are limited to a maximum of 30 of the weld length. Not more than two repairs are permitted on the same location. All repairs shall be carried out the day after initial Radiography or earlier. A report of all repairs shall be maintained by CONTRACTOR and submitted every day to the Company / Consultant.

13.2 **Weld Rejected by Accumulation of Defects**

Where a weld is rejected by the accumulation of defect clause, as defined by API 1104 and this specification, repairs within these limitations are permitted. Defects in the filling and capping passes shall be repaired preferentially.

14. DESTRUCTIVE TESTING OF WELDED JOINT - BUTT WELDS

14.1 Preparation

Having passed the visual and the non-destructive-inspection the test weld shall be subject to mechanical test.

After satisfactory completion of all visual and non-destructive testing the test weld shall be set aside for a period not less than 24hours. No further work on the test weld and no cutting of test specimens from the weld shall be performed until a period of at least 24 hours has expired. Having passed the visual and the nondestructive inspection, the test weld shall be subjected to mechanical test.

Weld specimens shall be taken from the positions indicated in Fig. 1 of this specification from areas as free from defects as possible for this reason it is necessary to take the previous non-destructive tests into account. The minimum number of tests to be carried out is given in Table-1 of this specification.

The tests shall be carried out in laboratories approved by the COMPAN . The specimens shall be prepared in accordance with the figures given in the paragraphs which refer to the individual tests.

14.2 Tensile Strength

Specimens shall be taken from the position indicated in Fig. 1 & 1A of this specification. Two ISO type specimens and two API - type specimens shall be taken.

The ISO test specimen are shown in Fig. 2 of this specification.

14.2.1 Method

The test shall be carried out in accordance with ISO:375.

Table-1

Type and Number of Test Specimens for Procedure Qualification Test & Production Welds

Pipe Size, Out Side Diamter-	Number of Specimens									
	Tensile	Tensile	Nick	Root	Face	Side	Macro	Hard-	Impact	Total

Inches	API	ISO	Break	Bend	Bend	Bend	Bend	ness		
Wall Thickness - inch (12.7mm) and Under										
Under 2-3/8	0	0	2	2	0	0	0	0	0	4
2-3/8 to 4- incl.	0	0	2	2	0	0	0	0	0	4
Over 4- less than 12.75	2	0	2	2	2	0	2	2	12	24
12- 3/4 and over	2	2	4	4	4	0	2	2	24	44
Wall Thickness - Over inch (12.7mm)										
4- and smaller	0	2	0	0	0	2	0	0	0	4
Over 4- less than 12-3/4	2	0	2	2	2	0	2	2	12	24
12-3/4 and over	2	2	4	0	0	8	2	2	24	44

14.3 Nick-Break Test

14.3.1 Preparation

Specimens for Nick-break test with notches thus worked can break in the base metal, instead of in the fusion zone therefore an alternative test piece may be used after authorisation by the COMPAN with a notch cut in the reinforcement of outside weld bead to a maximum depth of 1.5mm measured from the surface of the weld bead.

14.4 Macroscopic Inspection

14.4.1 Preparation

Specimens shall be taken from the positions indicated in Fig. 1 of this specification and shall be prepared in accordance with ASTM E2 and E3.

The width of the macrosection has to be at least three times the width of the weld. The section is to be prepared by grinding and polishing and etched to clearly reveal the weld metal and heat affected zone.

14.4.2 Method

Specimens shall be carefully examined under the microscope, with a magnification of atleast 25 times (25:1). The COMPAN may ask for a macrograph with 5 times (5:1) magnification for DOCUMENTATION purposes.

14.4.3 **Requirements**

Under macroscopic examination, the welded joints shall show good penetration and fusion, without any defect exceeding the limits stated in the evaluation criteria of the nick break test.

14.5 **Hardness Test**

14.5.1 **Preparation**

The prepared macrosection is to be used for hardness testing using the Vickers method with 10 kg load Indentations are to be made along traverses each approximately 1mm below the surface on both sides of the weld.
In the weld metal a minimum of 6 indentations equally spaced along the traverses are to be made. The HA indentations are to be made along the traverses for approximately 0.5mm each into unaffected materials, and starting as close to the fusion line as possible.

One indentation on each side of the weld along each traverse is to be made on parent metal. Refer Fig.3. The indentations are to be made in the adjacent regions as well on the opposite sides of the macrosection along the specified traverses.

14.5.2 **Method**

The test shall be carried out in accordance with Recommendation ISO R81, Vickers hardness, using a laboratory type machine controlled as pre-recommendation ISO R146 and using a diamond pyramid penetrator set at 2.37 rad (136°) with a load of 10 kg.

14.5.3 **Requirements**

Hardness value shall not exceed the limit specified in welding Specification chart. In case of a single reading having a slightly (10 HV) higher value than the specified limit, further indentations shall be made to check if the high value was an isolated case.

All the hardness values contained from the heat affected zone shall not exceed 100 HV with respect to the average hardness of the values obtained for the base metal. If these additional tests give a hardness within the specification limit the slightly higher value may be accepted.

14.6 **Charpy - V - Notch Impact Test**

14.6.1 Specimens shall be taken from the position indicated in Fig. 1 of this specification. The test specimens will be prepared in accordance with ISO R148. Charpy V-notch specimens shall have dimensions as given in Fig. 3 of this specification.

Three test specimens shall be taken from each sample and they shall be cut and worked so that their length is transverse and perpendicular to the weld bead with the notch

position as shown in Fig. 4 of this specification. The notch shall be perpendicular to the roller surface. The test specimen width shall depend upon the pipe wall nominal thickness as following :

Sl. No.	Nominal Wall Thickness in mm	Test Specimen width mm
1.	Over 12	10
2.	Over 9.5 and upto 12	7.5
3.	From 7 upto 9.5	5
4.	Less than 7	2.5

14.6.2 **Test Method**

The test shall be carried out as indicated in ISO R148 Beam impact test V-notch .

Test pieces shall be immersed in a thermostatic bath and maintained at the test temperature for at least 15 minutes. They shall then be placed in the testing machine and broken within 5 seconds of their removal from the bath. The test temperature shall be as mentioned in Special conditions of the Contract.

14.6.3 **Requirements (Note-1)**

The impact energy shall be as follows :

Sl. No.	Test Specimen in mm	"Average of three Specimens (Note-2) Joules (Min.)	Minimum Single Value (Note-1) Joules
1.	10.0	27.0	22.0
2.	7.5	21.5	17.0
3.	5.0	18.5	15.0
4.	2.5	10.0	8.0

Note :

1) Only one value is permitted to be lower than average value upto the value specified.
2) These values are specified for resistance to brittle fracture only, where additional requirements are specified in project data sheet. (Ex. pipeline materials with arrest properties i.e. a higher upper shelf charpy V-energy for resistance against propagating ductile fractures) the same shall be followed.

14.7 **Bend Test Requirements**

The Bend test Specimens shall be made and tested as per the requirements of API 1104 Sixteenth Edition May 1983 except that the dimensions of the Jig for guided bend test

Fig. 5 para 2.6 API 1104 shall be modified as follows:

Radius of the Plunger A	:	2 t
Radius of the die B	:	3 t 1.6mm
Width of the die C	:	50.8mm

The acceptance criterion on shall however be as per para 2.643 and 2.653 of API 1104 nineteenth edition Sept. 1999.

Note : t thickness of specimen

15. ULTRASONIC INSPECTION

In addition to the radiographic inspection, ultrasonic inspection is required as per conditions listed in paragraph 12.5 of this specification. This section concerns manual ultrasonic inspection. However ultrasonic by automatic equipment may be used if approved by the COMPAN .

15.1 Equipment and Operators

The CONTRACTOR who carries out the ultrasonic inspection shall have sufficient qualified personnel equipment and instruments at his disposal to be able to effect the tests without hindering or delaying the pipeline assembly operations.

The operators shall be fully qualified as per a recognised standard (ASME Sec. V or equivalent) and they shall have as minimum level II as described in para 11.4.3, API 1104 nineteenth edition. The operators shall be able to :

- calibrate the equipment
- perform an operational test under production conditions
- interpret the screen picture
- evaluate the size and location of reflectors
- interpret the type of defects detected

The COMPAN has the option of checking the ability of personnel employed for ultrasonic testing by means of qualification tests.

The CONTRACTOR appointed to carry out ultrasonic inspection shall supply all the instruments necessary for their execution on site.

15.2 Specification for Ultrasonic Inspection Procedure Qualification

Before work begins, the CONTRACTOR shall present a specification describing the proposed U.T. procedure qualification.

This specification shall state, as an indication only but not limited to the following

information :

- type of U.T. equipment used
- type and dimensions of transducers
- frequency range
- details for calibration
- coupling medium
- inspection technique
- record details
- reference to the welding procedure where it is intended to adopt the specification.
- temperature range of the joints to be inspected.

15.3 **Qualification of Ultrasonic Inspection Procedure**

The ultrasonic inspection procedure shall be approved by the COMPAN . Before inspection begins, the COMPAN may require the qualification test of the ultrasonic inspection procedure. This specification test consists in testing (under normal operating conditions) some CONTRACTOR welds made according to the same production procedure, where there are typical defects the test intends to detect.

This test shall be conducted in the presence of the COMPAN . The Ultrasonic inspection procedure shall be approved by the Company.

15.4 **Test Procedure**

Circumferential welds shall be inspected from both sides using angled probes.

The surface with which the probes comes into contact shall be free of metal spatter, dirt, iron oxide, and scales of any type therefore it shall be necessary to clean a strip at least 50mmwide on both sides of the weld with steel wire brushes and anyhow the cleaned strip must be atleast wide enough to allow full skip examination.

If, during the test, echoes of doubtful origin appear, it shall be necessary to inspect a convenient area on the pipe surface, close to the weld, with a straight beam transducer in order to check whether any manufacturing defects are present which could have interfered with the ultrasonic beam.

By way of an example, the equipment shall include but not be limited to the following:-

- ultrasonic equipment and coupling medium
- sample sections for calibration of instruments
- equipment for cleaning of surface to be examined
- rules calibrated in centimeters for exact location of the position of defects.

The characteristics of the above - listed instruments and equipment shall guarantee:

a) that the required standards of the inspection procedure, as previously

established and approved by the COMPAN , are satisfied.

b) continuous operation

All the instruments and equipment shall be approved by the COMPAN before being used. The COMPAN has the authority to reject any item which is considered unsuitable. The decision of the COMPAN is final. The CONTRACTOR appointed to carry out ultrasonic inspections shall also ensure the operational efficiency and maintenance of the instruments and equipment, and shall immediately substitute any item rejected by the COMPAN .

All the instruments and equipment necessary for carrying out ultrasonic inspection on site shall satisfy the requirements laid down by the public boards of institutions which regulate safety at work .

15.5 **Ultrasonic Instruments**

The Ultrasonic Instruments shall satisfy the following:

- be pulse-echo type, able to generate, receive and display, on the screen a cathode ray tube (CRT) pulse at frequencies between 1 and 6 MHz. The useful part of the CRT screen shall be at least 70mm wide and at least 50mm high.
- shall have variable amplification, with steps of 1 or 2 dB over a range of a least 60 dB.
- the regulation control shall be accurate to within 1 db and this accuracy shall be certified by the instrument manufacturer.
- may be powered by a battery or an electric generator. In the first case, the autonomy of operation (endurance) of the instrument shall be sufficient to carry on working without frequent interruptions, and the instruments shall be equipped with an automatic switch which switches it off when the battery runs down in the second case, there must be a voltage stabilising device with a tolerance of 2 Volts.

15.6 **Probes**

The probes used shall have dimensions, frequencies, and a refraction angle suited to the type of steel, the diameter, the thickness of the pipe and to the joint design.

15.7 **Reference Sample Pieces**

The efficiency of the equipment used, the effective refraction angle of the probe, and the beam output point, shall be checked using a V_1 and V_2 sample block, IIW type or calibration block ASTM E-428.

For manual Ultrasonic testing and automated Ultrasonic testing, the reference sample pieces shall be as described in API 1104, Nineteenth Edition, para 11.4.5.

15.8 **Calibration**

The calibration, qualification of the testing procedure shall be done as provided in API 1104.

15.9 **Regulation of Amplification During Production Testing**

Scanning sensitivity shall be as provided in API 1104 para 11.4.7.2 &11.4.7.3.

15.10 **Qualification of Ultrasonic Testing Operators**

Before the inspection begins or during the same inspection, the COMPAN may require a qualification test for the ultrasonic equipment operators.

15.11 **Evaluation of Indications Given by Ultrasonic Tests**

Each time that echoes from the weld bead appear during production testing, the instrument amplification shall be altered to coincide with the reference amplification and the probe shall be oved until maximum response is obtained, paying attention all the time of the probe-tube coupling.

If, under these conditions, the heights of the defect echo is equal to or greater than that of the reference echo, the defect shall be evaluated according to other clauses of this Specification. If the defect has also been detected by the radiographic and or visual examination, the dimensions shall be judged according to the type of examination which detects the greater defect. Returns which are less that 50 of the reference echo, will not be considered. If returns are above 50 but lower than 100 of the reference echo, and if the operator has good reasons to suspect that the returns are caused by unfavourably oriented cracks, the same shall be informed to the COMPAN . Moreover, when there is a defect to be repaired, such defect shall be removed for a length corresponding to the one where no more return echo is given.

15.12 **Other Equipment**

The use of rules calibrated in centimeters, attached if possible to the probe, for the precise location of the position of welding defects, is recommended. Defect location is effected by measuring the projection distance between the probe output and the reflecting surface.

The operators carrying out the tests shall have besides the probing instrument, tools for cleaning the pipe surface (files, brushes, etc.), as well as, the coupling liquid or paste appropriate for the temperature of the section to be examined.

16.0 AUTOMATED ULTRASONIC TESTING (AUT)

- **INTRODUCTION**

The specification shall be applicable for Automated Ultrasonic Testing (AUT) system suitable for pipeline girth welds. The system shall be based on focused pulse-echo, tandem or through transmission methods enhanced with mapping image and augmented by Time Of Flight Diffraction (TOFD) technique.

- **REFERENCE DOCUMENTS**

ASTM E 1961-98 Standard Practice for Mechanized Ultrasonic examination of Girth Welds using onal Discrimination with Focused Search Units . The inspection system shall meet and exceed the requirements of ASTM E 1961-98.

Appendix-E, Automated Ultrasonic Girth Weld Testing , OS-F101, Submarine Pipeline Systems, January 2000.

API Std. 1104 Welding of Pipeline and Related Facilities .

- **APPROVED AGENCIES**

Following agencies for Automatic Ultrasonic Testing (AUT) are acceptable:

a) RTD uality Services, Rotterdam, Netherlands
b) SHAW Pipeline Services, Canada
c) WELDSONIX, USA
d) UT uality, Canada
e) SCI, Spain
f) SIEVERT India Private Ltd., India

In case bidder proposes to employ any other agency, the proposed agency shall meet the qualification criteria listed below and shall submit necessary documentation. The detailed system description and procedure shall be submitted for COMPAN evaluation/ approval.

Automatic Ultrasonic Testing (AUT) systems and agencies who have proven track record and have done a single project of diameter 20 or above and minimum length of 50 km and also have inspected a cumulative length of 500 km or above on large diameter Pipe lines in the last ten years shall only be accepted. The agency should have been approved by the reputed inspection agencies. The track record shall be submitted to the COMPAN for approval prior to engagement.

- **AUT SYSTEM**

The system shall meet and exceed the requirements of ASTM E1961-98.

The system shall provide an adequate number of examination channels to ensure the complete volumetric examination of the weld through the thickness in one circumferential scan. The evaluation zones should be of maximum 2.0mm height. The instrument linearity should be such that the accuracy is within 5 .

Each examination channel should be selective for pulse-echo or through transmission mode gate position and length for a minimum of two gates and gain.

TOFD techniques & B-scan mapping should be available to improve characterization. Recording thresholds should be selectable to display signals between 0 and 100 of full screen height for simple amplitude and transit time recording and it should be from 0 to 100 for B-scan or mapping type recording of data. Two recordable signals output per gate should be available being either analog or digital and representative of signal height and time of flight. Measuring distance accuracy of circumferential weld shall be within 1.0 cm from zero (0) position.

Electronic noise shall be lower than acoustical noise in all channels for the probes and sensitivities to be used during inspection. The signal to noise ratio for each channel during examination shall be at least ≥ 20 dB for shear waved probes.

- **COUPLING**

The coupling shall be obtained by using a medium suitable for the purpose. It shall be suitable for the temperature used. No residue shall remain on the pipe surface. A method should be employed to determine that constant coupling is achieved during examination. An examination of the test piece with its surface wiped dry should produce a record showing an absence of the couplant recording signal.

- **SEARCH UNITS**

The search unit shall meet all the requirements specified in Para 6.4 of ASTM E1961 - 98.

- **CALIBRATIONS**

Reference standards shall be manufactured from a section of unflawed project specific line pipe supplied by pipeline CONTRACTOR. The agency shall then submit the reference standard design to the COMPAN before manufacturing. No design changes in the reference standard shall be made without the prior approval. Annexure A3 of the standard ASTM E1961-98 provides an example for minimum requirements for reference standards.

The system shall be optimized and calibrated as stated in Para 7.0 and 8.0 of ASTM E 1961-98. Static and Dynamic calibration shall be done and the approved procedure shall clearly state the gain setting fixed for each channel.

The reference standard should be used to verify the scanning sensitivity at the start of each shift and thereafter at intervals not exceeding two (2) hours or ten (10) welds.

A re-calibration shall be carried out if :

a) The calibration of an inspection function differs more than /- 3dB from the previous calibration
b) The gate settings need to be adjusted with more than /- 1.5 mm with the previous calibration
c) After a weld repair
d) After equipment breakdown.

In case the calibration differs from the initial setting, outside the given tolerances, the applicable probe(s) and coupling shall be checked. If the calibration has to be changed, the welds before this calibration upto the previous calibration will be re-examined.

The reference standard design for calibration shall be approved separately. The procedure for calibration and verification shall be same as given above.

- **PROCEDURE**

A detailed AUT procedure shall be prepared and qualified for each wall thickness and joint geometry to be examined prior to the start of any NDT work. Repair procedure shall be separately qualified for each joint geometry. All the requirements of ASTM E1961-98 should be met. The procedure as a minimum shall include the following:

- Functional description of equipment
- Reference standards and guidelines controlling equipment maintenance
- Instructions for scanning device, Ultrasonic instrument, Ultrasonic electronics, Hard & Software for recording processing, Display presentation and storage of inspection data
- Transducer configuration(s), characteristics types coverage.
- Number of examination zones for each wall thickness to be examined.
- Gate settings
- Equipment settings -Description of calibration blocks including type, size and location of calibration reflectors, a) calibration intervals, b) calibration records - Static and dynamic calibration procedure
- Identification of inspection starting point scanning direction and indication of length inspected

- Method for scanner alignment and maintenance of alignment
- Allowed temperature range
- Couplant coupling and coupling control and channels provided to indicate lack of coupling and method to ensure constant coupling
- Transducer and over all functional checks
- Height and length sizing methodology
- Surface condition and preparation
- Description of inspection work
- Acceptance criteria and instructions for reporting including example of recorder chart and form to be used.
- A table indicating corresponding channel no., probe, type, location of reflector, probe coupling etc.

- **Setting of Inspection Gates**

Pulse-echo and Tandem Channels

With each transducer positioned for the peak signal response from the calibration reflector the detection gates are to be set. The gate shall start 2-6mm (allowance for width of heat affected zone) before the theoretical weld bevel preparation. The gate ends shall be after the theoretical weld centerline. All gates will be programmed to record amplitude and/or transit distance information. The length of the transit distance in the root channel will be extended to enable root penetration registration.

Mapping Channels

The mapping gates in the body of the weld shall start 2-6mm (allowance for width of heat affected zone) before the theoretical weld bevel preparation. The gate length will be extended to enable cap reinforcement registration. The mapping gates in the root will be set identical to the pulse-echo transit distance channels to enable the registration of the root penetration.

TOFD Channel

The TOFD gate start will be set 1 µSec before the arrival of the lateral wave and should extend up to the first back wall echo to achieve full cover of wall thickness.

Note: The gate settings may be altered if geometry indications dictate.

Sensitivity Settings

With each transducer positioned for the peak signal response from the calibration

reflector (flat bottom holes), the detection gates are to be set. In this position, the probe holder is fixed to the probe frame. The equipment sensitivity (echo amplitude) for all inspection channels shall be set at 80 Full Screen Height (FSH).

Mapping channels in the body of the weld will be used to detect the presence of porosity and in addition to identify the position of the weld cap reinforcement for pattern recognition purpose. The sensitivity as a minimum is equal to the related pulse- echo channels, increased with additional gain to ensure proper detection.

Mapping channels in the root will be used to identify the position of the root penetration for pattern recognition purpose. The sensitivity as a minimum shall be equal to the related pulse-echo channels, increased with additional gain to ensure proper detection.

The lateral wave of the TOFD channel sensitivity is set at 80 FSH.

- **TRAINING AND QUALIFICATION**

1. All Inspectors' of the COMPAN (Owner) shall be imparted training at the CONTRACTOR's cost. The inspector shall be provided complete awareness and knowledge regarding the equipment, limitations, capabilities complete range, method of operation, calibration, scanning, including development of suitable procedure, training on variables effecting the system performance and interpretation of results.

2. The Ultrasonic lead operator performing the examination shall be qualified in accordance with the COMPAN 's written practice and in accordance with ASNT Practice SNT-TC-1A and EN 473 Level II. He should have experience in multichannel UT equipment and be trained in using mechanized UT manipulators.

- **FIELD EXAMINATIONS AND REPORTING**

All the requirements stated in Para 9 and 10 of ASTM E1961-98 shall be followed a minimum.

- **INTERPRETATION OF RESULTS**

General

With the transit distance measurements and with the information from the mapping and TOFD channels visible on the result presentation, indications shall be judged whether they are from the weld geometry or from the defects. The coupling channels will check for coupling loss in case of coupling loss, a re-scan shall be carried out.

Inspection Result

The inspection result should be evaluated and/or reported as follows:

Welds shall be evaluated using both the pulse-echo and TOFD criteria shown below.

This shall be performed in parallel and rejection against either of these criteria shall be cause for rejection of the weld. The exceptions to this are described in the following notes:

1. All indications in the pulse echo channels should be evaluated which exceed the threshold level of 20 FSH.
2. Defect length shall be measured for the pulse-echo channels from the point where the signal exceeds 20 FSH to the point the signal falls below. The largest height assessed with TOFD or the greatest measured amplitude with pulse-echo shall be assumed to apply over the whole defect length.
3. If the indication cannot be resolved by TOFD i.e. the upper and lower flaw diffraction tips cannot be separately distinguished, no measurement can be made to determine the defect height. In this case, the signal from the pulse-echo channels will be solely used to determine that particular area of the scan.
4. Defects shall be assessed for interaction as follows:

   a) Horizontal interaction

   If the distance between two adjacent defects is less than the length of the smaller of the two defects, then the defect shall be treated as a single defect.

   b) Vertical interaction

   Vertical interaction of defects shall be assessed using TOFD. If the distance between the two adjacent defects is less then the height of the shorter of the two defects, than the defect shall be treated as a single defect. Where the individual defects cannot be resolved by TOFD for the vertical interaction, then the defects are assumed to interact and shall be treated as a single defect.

5. The maximum allowable accumulated defect length shall be as per the criteria given in welding specification.

- **ACCEPTANCE CRITERIA**

Weld quality shall be judged on the basis of the acceptability criteria mentioned in welding specification.

17.0 RADIOGRAPHY

17.1 Scope

This covers the radiographic inspection of all types of welded joints of the main pipeline.

The welded joints shall include the following :-

i. Full girth welds on the mainline construction including double jointing of pipe, if adopted.

ii. Welds for installation of block valves, insulating joints and other appurtenances and tie-ins.

iii. Welds at scraper launching and receiving barrels.

iv. Terminal Piping

17.2 Applicable Standards

This specification shall apply in conjunction with the following (all latest edition):

i. API 1104, Standard for welding Piplines and Related Facilities.

ii. ANSI B31.8, Code for Gas Transmission and Distribution Piping Systems.

iii. ANSI B31.4, Code for Liquid Petroleum Transportation Piping Systems.

iv. ASTM E94, Recommended practice for Radiographic Testing.

v. ASTM E142, Standard Method for Controlling uality of Radiographic Testing.

vi. The American Society for Non-destructive Testing. Recommended Practice No. SNT - TC-1A Supplement A.

17.3 Procedure

17.3.1 The radiographic examination procedure to be adopted shall be submitted by the CONTRACTOR as per Annexure VI.

17.3.2 The procedure of radiographic examination shall be qualified to the entire satisfaction of COMPAN prior to use. It shall include but not be limited to the following requirements :

i. Lead foil intensifying screens, at the rear of the film shall be used for all exposures.

ii. Type 2 and 3 films as per ASTM E-94 shall be used.

iii. A densitometer shall be used to determine film density. The transmitted film density shall be 2.0 and 3.5 throughout the weld. The unexposed base density of the film shall not exceed 0.30.

iv. Radiographic identification system and documentation for radiographic interpretation reports and their recording system.

17.3.3 The CONTRACTOR shall qualify each procedure in the presence of the COMPAN prior to use.

17.3.4 The procedure of radiographic examination shall produce radiographs of sufficient density, clarity and contrast so that defects in the weld or in the pile adjacent to the weld, and the outline and holes of the penetrameter are clearly discernible.

17.3.5 All the girth welds of mainline shall be subjected to 100 radiographic examination. The CONTRACTOR shall furnish all the radiographs to the COMPAN , immediately after processing them, together with the corresponding interpretation reports on approved format. The details of the radiographs all alongwith the joint identification number shall be duly entered in a register and signed by the CONTRACTOR and submitted to the COMPAN for approval.

17.3.6 When the radiation source and the film are both on the outside of the weld and located diametrically opposite each other, the maximum acceptable length of film for each exposure shall not exceed the values given in Table-4 of API 1104. The minimum film overlap, in such cases, shall be 40mm. The ellipse exposure technique may be used on nominal pipe sizes of 2 inch and smaller provided that the source of film distance used is a minimum of 12 inch.

17.3.7 Three copies of each acceptable radiographic procedure (as per Annexure-VI) and three copies of radiographic qualification records, shall be supplied to COMPAN . One set of the qualifying radiographs on the job shall be kept by the CONTRACTOR s authorised representative to be used as a standard for the quality of production radiographs during the job. The other two sets shall be retained by COMPAN for its permanent record.

17.3.8 Three copies of the exposure charts relating to material thickness, kilo voltage, source of film distance and exposure time shall also be made available to COMPAN by the CONTRACTOR.

17.3.9 The CONTRACTOR shall, on a daily basis, record for each radiograph (1) radiograph s number, (2) welder s number (3) approximate chainage of weld location, (4) whether or not the welds meet the specified acceptance standards and (5) the nature and approximate location of unacceptable defects observed. It must be possible to relate back to a particular butt weld and welder on piping drawing and pipe line alignment drawing.

17.3.10 Each day s production of processed radiographs shall be properly packaged separately, identified

by at least the (1) date, (2) radiographic unit, (3) job locations, (4) starting and ending progress survey stations and (5) shall include original and three copies of the daily radiographic record. The package shall be submitted to the COMPAN daily when possible, but in no event later than noon of the following day.

17.3.11 The CONTRACTOR shall provide all the necessary facilities at site, such as a dark room with controlled temperature, film viewer etc. to enable the COMPAN to examine the radiographs.

17.3.12 The CONTRACTOR, if found necessary, may modify the procedure of radiographic examination suiting to the local conditions prevailing. This shall, however, be subject to the approval of the COMPAN .

17.3.13 COMPAN shall have free access to all the CONTRACTOR s work facilities in the field.

17.3.14 Any approval granted by the COMPAN shall not relieve the CONTRACTOR of his responsibilities and guarantees.

17.4 **Radiation Source**

17.4.1 Radiographic examination shall be carried out using x-radiations, Radiographic examination by Gamma rays may be allowed, at the discretion of the COMPAN , in case of inaccessible joints. Radiography by Gamma-Ray for tie-in-joints shall be acceptable provided D4 AGFA film or equivalent is used and the required sensitivity obtained.

17.4.2 Whenever possible, pipeline welds will be inspected by placing the radiation source inside the pipe, on the pipeline axis, with a radiation of 6.28 rad. (360°C).

If it is impossible to place the radiation source inside the pipe, the weld will be inspected with the source on the outside. An overlap of at least 40mm at the ends of each film shall be required to ensure that the first and last location increment numbers are common to successive films and to establish that no part of a weld has been omitted.

17.5 **Level of Quality**

The quality level of Radiographic sensitivity required for radiographic inspection shall be at least equivalent to the values in Fig. 6

17.6 **Penetrameters**

The image quality indicator (abbreviation : I I) shall be used for the qualification of the welding procedure and during normal line production. Radiographic sensitivity shall be measured with the wire image quality indicator (Penetrameter). The penetrameter shall be selected according to DIN54109 or ISO1027. For radiographs made with the source on the outside, a penetrameter shall be placed on each side of the film with the smaller wiere of the penetrameter turned towards the end of the film itself. When a complete weld is radiographed in a single exposure using a source inside the piping, four

penetrameter approximately equally spaced around the circumference shall be used. During the procedure qualification, I I shall be placed both on the source side and on the film side. The sensitivity obtained with I I on the source side shall not be less than the values shown in Fig. 6 of this specification.

The sensitivity limit may be considered to have been reached when the outline of the I I, its identification number and the wire of the required diameter show up clearly on the radiograph.

The COMPAN may authorise use of types of I I other than those planned, provided that they conform with recognised standards and only if the CONTRACTOR is able to demostrate that the minimum sensitivity level required is obtained. For this demostration, a test shall be carried out comparing the I I specified and the CONTRACTOR s, to show up the identification number and other details of the proposed I I, which must be visible in the test radiograph.

17.7 **Film Identification Markers**

All films shall be clearly identified by lead numbers, letters, and/or markers. The image of the markers shall appear on the films, without interfering with the interpretation. These markers positions shall also be marked on the part to be radiographed and shall be maintained during radiography.

17.8 **Protection and care of film**

17.8.1 All unexposed films shall be protected and stored properly as per the requirements of API 1104 standard and ASTM E.94.

17.8.2 The exposed and unexposed film shall be protected from heat, light, dust and moisture. Sufficient shielding shall be supplied to prevent exposure of film to damaging radiation prior to and following the use of the film for radiographic exposure.

17.9 **Re-radiography**

17.9.1 The weld joints shall be re-radiographed in case of unsatisfactory quality of the radiographs, at the expense of the CONTRACTOR.

17.9.2 All the repaired weld joints shall be re-radiographed at no extra cost to the COMPAN in the same manner as that followed for the original welds. In addition, the repaired weld areas shall be identified with the original identification number plus the letter R to indicate the repair.

17.9.3 When evaluating repair film, radiographers shall compare each section (exposure) of the weld with the original film to assure repair was correctly marked and original defect removed.

17.9.4 The COMPAN will review prior to any repair of welds, all the radiographs of welds which contain, according to the CONTRACTOR s interpretation, unacceptable defects. The final disposition of all unacceptable welds shall be decided by the COMPAN .

17.10 **Qualification of Radiographers**

17.10.1 Pipeline radiographers shall be qualified in accordance with the requirement of API 1104 and to the full satisfaction of COMPAN .

17.10.2 Certification of all the radiographers, qualified as per 16.10.1 above, shall be furnished by the CONTRACTOR to the COMPAN before a radiographer will be permitted to perform production radiography. The certificate record shall include :

i. Background and Experience Record

ii. Training Course Record

iii. Technical Examination Record

iv. Doctor s report on radiographer s Oaecuer 0-1 acquity eye test.

v. Date of qualification

17.10.3 The radiographers shall be required to qualify with each radiographic procedure they use, prior to performing the work assigned to him in accordance with the specification.

17.11 **Preservation of Radiographs**

17.11.1 The radiographs shall be processed to allow storage of films without any discoloration for at least three years. All the radiographs shall be presented in suitable folders for preservation alongwith necessary documentation.

17.11.2 All radiographs shall become property of the COMPAN .

17.12 **Equipment and Accessories**

17.12.1 CONTRACTOR shall make necessary arrangement at his own expense, for providing the radiographic equipment, radiographic film and all the accessories for carrying out the radiographic examination for satisfactory and timely completion of the job.

17.12.2 For carrying out the mainline radiographic examination the CONTRACTOR shall be equipped with suitable mobile/ stationary type dark rooms.

These shall have all the required facilities for film processing. Film viewer used shall be equipped with the film illuminator that has a light source of sufficient intensity and suitably controlled to allow viewing film densities upto 4.0 without damaging the film.

17.13 **Radiation Protection**

17.13.1 CONTRACTOR shall be responsible for the protection and personnel monitoring of personnel with or near radiation sources.

17.13.2 The protection and monitoring shall comply with local regulations.

17.13.3 In view of visual hazards in the handling of Radioactive source of material, CONTRACTOR shall be solely responsible for complying with all rules and regulations set forth by Atomic Energy Commission or any other Government agency of India in this regard and COMPAN shall not be responsible and shall be kept indemnified by the CONTRACTOR for default (s) of whatever nature by the CONTRACTOR. Safety equipment as considered adequate by the COMPAN for all necessary personnel shall be made available for use and maintained for immediate and proper use by the CONTRACTOR.

17.14 **Display of Safety Instructions**

17.14.1 The safety provisions shall be brought to the notice of all concerned by display on a notice board at a prominent place at the work spot. The person responsible for the safety shall be named by the CONTRACTOR.

17.15 **Enforcement of Safety Regulations**

17.15.1 To ensure effective enforcement of the rules and regulations relating to safety precautions, the arrangement made by CONTRACTOR shall be open to inspection by COMPAN or its representatives.

17.16 **First Aid and Industrial Injuries**

17.16.1 CONTRACTOR shall maintain first aid facilities for its employees and sub-contractors.

17.16.2 CONTRACTOR shall make outside arrangements for ambulance service and for treatment of industrial injuries. Names of those providing these services shall be furnished to COMPAN prior to start of work and their telephone no. shall be posted prominently in CONTRACTOR s field office.

17.16.3 All critical industrial injuries shall be reported promptly to the COMPAN and a copy of CONTRACTOR s report covering each personal injury requiring the attention of physician shall be furnished to the COMPAN .

17.17 **No Exemption**

17.17.1 Notwithstanding the above there is nothing in these to exempt the CONTRACTOR from the operation of any other act or rules in force.

ANNEXURE-I
Sheet 1 of 3

ELECTRODE QUALIFICATION TEST RECORD

A. **Tested at (Site name)** Date :

Manufacturer s Name :

Brand Name :

Batch Number & Size Tested :

Classification & Code :

Intended for Welding in Position :

In combination with (if any) :

Code of Reference (used for testing) :

Special requirements (if any) :

B. **All Weld Tensile Test**

Base Material used :

Pre-heat temp. :

Postweld Heat Treatment Details :

Visual Examination :

Radiographic Examination Results :

Tensile Test Results :

Sl.No.	Identification No.	U.T.S.	Yield Point	Elongation
1.				
2.				

ANNEXURE-I
Sheet 2 of 3

C. **Impact Test Results**

Test Temperature : Notch in :

Type of Specimens (Charpy) : Size of Specimens :

Sl.No.	Specimen No.	Impact Valve	Average
1.			
2.			
3.			
4.			
d 5.			
6.			

D. **Chemical Analysis Result**

Electrode Size used :

Batch No. :

%C	%S	%P	%SI	%Mn	%Cr	%Ni	%Mo	Other

E. **Fillet Weld Test Results**

Welding Positions :

Base Materials :

Size of Electrode used :

Visual Inspection Results : 1)
2)
3)

Macro Test results :

ANNEXURE-I
Sheet 3 of 3

Fracture Test Results :

Remarks :

F. **Other Test Results**

1. Transverse Tensile Test :

In combination with :

Base Material used :

Position of Welding :

Preheat Temperature :

Post Weld Heat Treatment :

Radiography :

Identification No.	U.T.S.	Fracture in	Remarks

2. **Guided Bend Test**

Position	ID No.	Root, Face or Side Bend	Remarks
	1.		
	2.		
	3.		
	4.		
	5.		

Any other Tests :

Conclusion :

ANNEXURE-II
Sheet 1 of 2

STRESS RELIEF HEAT TREATMENT PROCEDURE SPECIFICATION

Name of the Heat-Treater :

Name of the Project : Specification Reference No.:

1. **General Details**

Name of the Equipment :

Name of the Assembly/ Part :

Assembly/ Part Drawing No. :

Material :

2. **Furnace Details**

Type of Heating : Gas/ Oil/ Elec. Res./ Induction Type of Heating (Tick mark)

Capacity (Size) :

Maximum Temp.(°C) :

Method of Temp. Measurement :

Atmosphere Control :

3. **Heat Treatment Cycle Details**

Changing Temp. °C :

Rate of Heating, °C/ Hr. :

ANNEXURE-II
Sheet 2 of 2

Soaking Temp. °C :

Soaking Time, Hrs. :

Rate of Cooling, °C/ Hr. :

Mode of Cooling :

4. Other Details, if any.

Notes :
The following documents shall be furnished alongwith the specifications :
i. Material Test Certificates
ii. Assembly/ Part Drawing.

ANNEXURE-III

Sheet 1 of 3

FORMAT FOR WELDING PROCEDURE SPECIFICATION (WPS)

Company Name By
Welding Procedure Specification No. Date Supporting P R No. (S)
Revision No. Date
Welding Process (es) Type (s)
(Automatic, Manual, Machines or Semi Auto)

JOINTS

Joint Design
Backing (es) (No)
Backing Material (Type)
Sketches Production Drawings. Weld Symbols Written
Description should show the general arrangement of the parts to be welded. Where applicable, the root specing and the details of weld groove may be specified.

(At the option of the Manufacturer sketches may be attached to illustrate joint design weld layers and bead sequence e.g. for notch toughness procedures, for multiple process procedures, etc.)

BASE METALS

P.No. Group No. to P. No. Group No.
OR
Specification type and grade
to Specification type and grade
OR
Chern. Analysis and Mech. Prop.
to Chern. Analysis and Mech. Prop.
Thickness Range :
Base Metal: Groove Fillet
Deposited Weld Metal: Groove Fillet
Pipe Dia Range : Groove : Fillet
Other

ANNEXURE-III
Sheet 2 of 3

FILLER METALS

F.No. Other
A.No. Other
Spec. No. (SFA)
A WS No. (Class)
Size of filler metals

(Electrodes, Cold Wire, Hot Wire etc.)

Electrode-Flux (Class)
Flux Trade Name
Consumable Inset
Each base metal/filler metal combination should be recorded individually.

WPS NO. Rev.

POSITIONS :	**POSTWELD ED HEAT TREATMENT**
Position (s) of Groove Welding Progression: UP Down Position (s) of Fillet	Temperature Range Time Range
PREHEAT Preheat Temp. Min. Interpass Temp. Max. Preheat Maintenance	**GAS** Shielding Gas (es) Percent Composition (mixtures) Flow Rate Gas Backing Trailing Shielding Gas Composition

ELECTRICAL CHARACTERISTICS

Current AC or DC Polarity
Amps (Range) Volts (Range)
(Amps and volts range should be recorded for each electrode size, position, and thickness, etc. This information may be listed in a tabular form similar to that shown below).
Tungsten Electrode Size and Type
(Pure Tungsten, 2 Ceriated, etc)

Mode of Metal Transfer for GMAW
(Spray arc, short circuiting arc, etc.)

ANNEXURE-III
Sheet 3 of 3

Electrode Wire feed speed range

TECHNIQUE

String or Weave Bead _____

Orifice or Gas Cup Size_____

Initial and Interpass Cleaning (Brushing, Grinding, etc.) _____

_____

Method of Back Gouging _____

Oscillation _____

Contact Tube to Work Distance _____

Multiple or Single Pass (per side) _____

Multiple or Single Electrodes _____

Travel Speed (Range) _____

Peening _____

Other _____

_____

Weld Layer(s)	Process	Filler Metal		Current		Volt Range	Travel Speed Range	Others
		Class	Dia	Type Polarity	Amp. Range			
								e.g. Remarks, comments, Hot wire Addition, Technique Torch Angle, etc.

ANNEXURE-IV
Sheet 1 of 3

FORMAT FOR PROCEDURE QUALIFICATION RECORD (PQR)
RECORD ACTUAL CONDITIONS USED TO WELD TEST COUPON

Company Name

Procedure ualification Record No. Date

WPS No.

Welding Process (es)

Types (Manual, Automatic, Semi-Auto)

JOINTS

Groove Design of Test Coupon

(For combination qualification the deposited weld metal thickness shall be recorded for each Filler metal or process weld)

BASE METALS Material Sepc. Type of Grade P.No. to P.No. Thickness of Test Coupon Diameter of Test Coupon Other	**POSTWELD HEAT TREATMENT** Temperature Time Other
FILLER METALS Weld Metal Analysis A No. Size of Filler Metal Filler Metal E.No. SF A Specification A WS Classification Other	**GAS** Type of Gas on Gases Composition of Gas Mixture Other
POSITION Position of Groove Weld Progression (Uphill, Downhill) Other	**ELECTRICAL CHARACTERISTICS** Current Polarity Amps. Tungsten Electrode Size Other

ANNEXURE-IV
Sheet 2 of 3

PREHEAT	**TECHNIQUE**

Phreheat Temp. Interpass Temp.	Travel Speed String or Weave Bead Oscillation Multipass or Single Pass (per side) Single or Multiple Electrodes Other

GUIDED BEND TESTS

Type of Figure No.	Result

TOUGHNESS TESTS

Specimen No.	Notch Location	Notch Type	Test Temp.	Impact Value	Lateral Exp.		Drop Weight	
					% Shear	Mils	Break	No Break

FILLET WELD TEST

Result - Satisfactory: es No Penetration into Parent Metal: es No.

Marco Results

OTHER TESTS

Type of Test

Deposit Analysis

Other

Welder s Name Clock No. Stamp No.

ANNEXURE-IV

Sheet 3 of 3

Test Conducted by Laboratory Test No.

We certified that the statements in this record are correct and test welds were prepared, welded and tested in accordance with the requirements of Section IX of the ASME Code.

Date : Manufacturer :

By :

(Detail of record of tests are illustrative only and may be moulded to conform to the type and number of tests required by codes and specifications).

ANNEXURE-V
Sheet 1 of 2

FORMAT FOR MANUFACTURER'S RECORD FOR WELDER OR WELDING OPERATOR QUALIFICATION TESTS

Welder Name Check No. Stamp. No.

Using WPS No. Rev.

The above welder is qualified for the following ranges

Variable	Record Actual Values Used in ualification	ualification Range
Process		
Process Type		
Backing (metal, Weld metal, flux, etc)		
Material Spec.	to	to
Thickness Groove Filler		
Diameter Groove Filler		
Filler Metal Spec. No. Class F. No.		
Position		
Weld Progression		
Gas Type		
Electrical Characteristics Current Polarity		

ANNEXURE-V
Sheet 2 of 2

Guided Bend Test Results

Type and Fig. No.	Result

Radiographic Test Results
For alternative qualification of groove welds by radiography

Radiographic Results

Fillet Weld Test Results

Fracture Test (Describe the location, nature and size of any crack of tearing of the specimen
Length and Per Cent of Defects inches
Macro Test Fusion
Appearance - Fillet Size (ing) x Convexity or Concavity

Test Conducted by Laboratory - Test No.

We certify that the statements in this record are correct and that the test welds were prepared. Welded and tested in accordance with the requirements of Section IX of the ASME Code.

Date Organization
By

(Details of record tests are illustrative only and may be modified to conformation to the type & number of tests required by the Code).

Note: Any essential variables in addition to those above shall be recorded.

ANNEXURE-VI

Sheet 1 of 1

RADIOGRAPHIC PROCEDURE QUALIFICATION RECORD FOR PIPE WELDING

1. Location
2. Date of Testing
3. Name of the Contractor / Agency
4. Material : Carbon steel / Alloy Steel / Stainless Steel

4.A Technique: DWSI / SWSI / DWDI

5. Diameter & Thickness:
6. Type of Weld Joint:
7. Radiation Source:
8. Intensifying Screens/Lead Screens:
9. Geometric Relationship:
10. Limit of Film Coverage:
11. Film Type and Make:
12. Exposure Time:
13. Processing:
14. Density:
15. Sensitivity:
16. Type of penetrameter:
    (Source side)
17. Type of penetrameter:
    (Film side)

Signature of Contractor / Agency with Seal

Approval of MECON's Inspector

Ref. Para regarding recommended practice on placement of penetrameters Article 22, SE 142, ASME Sec. V.
For Random Radiography lines placement of penetrameters as per Article 2, ASME, Sec. V is permitted.

ANNEXURE-VII
Sheet 1 of 1

WELDERS IDENTIFICATION CARD

Name :

Identification :

Date of Testing :

Process :

Diameter and Thickness :

Thickness Range ualified :

Diameter Range ualified :

WPS No. :

Welding Position & Progression :

Type of welding consumables used :

Valid Till :

Photograph

Approved by :

Employer s Signature with seal

WELDING SPECIFICATION CHART

WELDING SPECIFICATION CHART

WELDING SPECIFICATION CHARTS TO SPECIFICATION FOR WELDING OF ONSHORE GAS PIPELINES NO. MEC/S/05/21/02

12 /10 /8 /6 4 LINE PIPE THK RANGE 6.4 mm				
MATERIAL SPECIFICATIONS	PIPES	**API 5L GR X-52/56 PSL 2**		
	FITTINGS	-		
	FLANGES	-		
	OTHERS	-		
BASE METAL 'P' NO	**1**			
WELDING PROCESS	**GROOVE JOINTS SINGLE SIDE BEVEL**			
	BUTT		**OTHER THAN BUTT**	
	ROOT PASS & HOT PASS : **SMAW**	FILLER PASS : **SMAW**	ROOT PASS : **N.A.**	FILLER PASS : **N.A.**
	FILLET JOINTS / SOCKET JOINTS : **N.A.**			
WELDING MATERIAL	**GROOVE OINTS**			
	BUTT		**OTHER THAN BUTT**	
	ROOT PASS: **E6010** HOT PASS: **E7010**	FILLER & CAP PASS **E7010**	ROOT PASS : **N.A.**	FILLER PASS : **N.A.**
	FILLET JOINTS / SOCKET JOINTS : **N.A.**			
	BACKING RING N.A.		**CONSUMABLE INSERT N.A.**	
JOINT PREPARATION	**API 1104 Latest Edition**			
GASES	PURGING :		SHIELDING :	
GAS COMPOSITION	PURGING :		SHIELDING :	
PREHEATING	PREHEAT TEMP: **100^{0}C MIN**		POST HEATING :	
CONTINUITY OF WELDING AND PREHEAT : REFER TO SPECIFICATION				
POST WELD HEAT TREATMENT	HOLDING TEMP :	N.A.	HOLDING TIME :	
	RATE OF HEATING:	N.A.	MIN. HOLDING TIME :	
	METHOD OF COOLING	N.A.	RATE OF COOLING :	
			WIRE SPEED	
MECHANICAL PROPERTY REQUIREMENTS	CHARPY 'V' NOTCH VALUE :		MIN: **22**	AVERAGE : **27**
	AT TEMPERATURE :		0°C	
	HARDNESS :			
CODE OF FABRICATION :	**API 1104 / B 31.8, latest edition**			

TECHNICAL NOTES :

1. All passes shall be carried out by SMAW process.
2. D7 Film shall be used for radiography by X-Ray

WELDING SPECIFICATION CHARTS TO SPECIFICATION FOR WELDING OF ONSHORE GAS PIPELINES NO. MEC/S/05/21/02

Terminal Piping PIPING CLASS		**A1A, A3A, B1A, D1A, E1A**		
MATERIAL SPECIFICATIONS	PIPES	ASTM A106 GR.B, API 5L GR B PSL 2, API 5L GR X-65 PSL 2, API 5L GR X-70 PSL 2, IS-1239 (BLACK) **ASSORTED PIPES**		
	FITTINGS	ASTM A105, ASTM A234 GR. WPB, ASTM A234 GR. WPB-W, MSS SP-75 GR. WPHY-52, MSS SP-75 GR. WPHY-65		
	FLANGES	ASTM A105, ASTM A694 GR. F-52, ASTM A694 GR. F-70, ASTM A516 GR. 70		
	OTHERS	-		
BASE METAL 'P' NO	**1**			
WELDING PROCESS	**GROOVE OINTS SINGLE SIDE BEVEL**			
	BUTT		**OTHER THAN BUTT**	
	ROOT PASS: **GTAW / SMAW**	FILLER PASS: **GTAW / SMAW**	ROOT PASS: **GTAW / SMAW**	FILLER PASS: **SMAW / GTAW**
	FILLET JOINTS / SOCKET JOINTS : **SMAW**			
WELDING MATERIAL	**GROOVE OINTS**			
	BUTT		**OTHER THAN BUTT**	
	ROOT PASS : **ER70S-2 / E6010** HOT PASS : **ER70S-2 / E7018-1**	FILLER & CAP PASS **ER70S- 2 / E7018-1**	ROOT PASS : **ER70S-2** HOT PASS : **ER70S-2 / E7018-1**	FILLER PASS : **ER70S- 2 / E7018-1**
	FILLET JOINTS / SOCKET JOINTS :**E7018-1.**			
	BACKING RING N.A.		**CONSUMABLE INSERT N.A.**	
JOINT PREPARATION	**ASME SEC. IX, latest edition**			
GASES	PURGING :		SHIELDING : Argon	
GAS COMPOSITION	PURGING :		SHIELDING :**99.995**	
PREHEATING/ INTERPASS	PREHEAT TEMP: **10^{0}C -100^{0}C** **INTERPASS Max 200^{0}C**		POST HEATING : N.A.	
CONTINUITY OF WELDINGAND PREHEAT : REFER TO SPECIFICATION				
POST WELD HEAT TREATMENT	HOLDING TEMP :		HOLDING TIME :	
	RATE OF HEATING:		MIN. HOLDING TIME :	
	METHOD OF COOLING :		RATE OF COOLING :	
MECHANICAL PROPERTY REQUIREMENTS	CHARPY 'V' NOTCH VALUE :		MIN: **22**	AVERAGE : **27**
	AT TEMPERATURE :		0°C	
	HARDNESS :			
CODE OF FABRICATION :	**ASME SEC. IX / B 31.8/ OISD 226, latest edition**			
TECHNICAL NOTES :				

MECON Limited	**WELDING SPECIFICATION CHART**	**Specification No. MEC/WSC/02**	**Rev.0**

WELDING SPECIFICATION CHARTS TO SPECIFICATION FOR WELDING OF ONSHORE GAS PIPELINES NO. MEC/S/05/21/02

Terminal Piping PIPING CLASS		**A4A, B4A, D4A, E4A**		
MATERIAL SPECIFICATIONS	PIPES	ASTM A 333 GR.6 **ASSORTED PIPES**		
	FITTINGS	ASTM A 350 GR.LF2, ASTM A 420 GR.WPL6, ASTM A 420 GR.WPL6-W		
	FLANGES	ASTM A 350 GR.LF2		
	OTHERS	-		
BASE METAL 'P' NO	**1**			
WELDING PROCESS	**GROOVE OINTS SINGLE SIDE BEVEL**			
	BUTT		**OTHER THAN BUTT**	
	ROOT PASS: **GTAW / SMAW**	FILLER PASS: **GTAW / SMAW**	ROOT PASS: **GTAW**	FILLER PASS: **SMAW / GTAW**
	FILLET JOINTS / SOCKET JOINTS : **SMAW**			
WELDING MATERIAL	**GROOVE OINTS**			
	BUTT		**OTHER THAN BUTT**	
	ROOT PASS : **ER70S-2 / E6010** HOT PASS : **ER70S-2 / E7018-1**	FILLER & CAP PASS **ER70S- 2 / E7018-1**	ROOT PASS : **ER70S-2 / E6010** HOT PASS : **ER70S-2 / E7018-1**	FILLER PASS : **ER70S- 2 / E7018-1**
	FILLET JOINTS / SOCKET JOINTS : **E7018-1**			
	BACKING RING N.A.		**CONSUMABLE INSERT N.A.**	
JOINT PREPARATION	**ASME SEC. IX, latest edition**			
GASES	PURGING :		SHIELDING : **Argon**	
GAS COMPOSITION	PURGING :		SHIELDING :**99.995**	
PREHEATING	PREHEAT TEMP: **10^0C -100^0C** **INTERPASS Max 200^0C**		POST HEATING :	
CONTINUITY OF WELDINGAND PREHEAT : REFER TO SPECIFICATION				
POST WELD HEAT TREATMENT	HOLDING TEMP :		HOLDING TIME :	
	RATE OF HEATING:		MIN. HOLDING TIME :	
	METHOD OF COOLING :		RATE OF COOLING :	
MECHANICAL PROPERTY REQUIREMENTS	CHARPY 'V' NOTCH VALUE :		MIN: **22**	AVERAGE : **27**
	AT TEMPERATURE :		0°C	
	HARDNESS :			
CODE OF FABRICATION :	**ASME SEC. IX / B 31.8 / OISD 226, latest edition**			

TECHNICAL NOTES :

MECON Limited	**WELDING SPECIFICATION CHART**	**Specification No. MEC/WSC/03**	**Rev.0**

APPENDIX –A

Data Sheets & QAPof Bought Out Materials

QUALITY ASSURANCE PLAN
FOR
FITTINGS

APPLICABLE CODES AND SPECIFICATIONS : MEC/TS/05/21/025, R-0 and MEC/TS/05/21/026, R-0 WITH AMENDMENTS									SCOPE OF INSPECTION		
S. NO.	STAGE	COMPONENT	CHARACTERI-STICS	METHOD OF CHECK	QUANTUM OF CHECK	REFERENCE DOCUMENTS	ACCEPTANCE NORMS	RECORD	Vendor/ Sub Vendor	TPI	MECON & Contractor
1.	Material	FITTINGS	Fully killed steel	MTC	100%	PO & Std. Spec.	PO QAP & Std. Spec.	MTC	P	R	R
2.	Inspection	FITTINGS									
i)	Visual Inspection	FITTINGS	Visual Imp.	Visual Internal & External Surface	100%			Inspection Report	P	W	R
ii)	NDT	FITTINGS	Soundness of Tee & Butt Welds	UT, RT & MPI	100%	PO & Std. Spec.	PO QAP & Std. Spec.	Inspection Report	P	W & Evaluation of RT Films	R
iii)	NDT	FITTINGS	Forgings	WET MPI	100%	PO & Std. Spec.	To comply with MSS-SP-53	Inspection Report	P	W	R
iv)	NDT	FITTINGS	End Laminations	UT for Distance of 25 mm on ends.	100%	PO & Std. Spec.	Any lamination than 6.35 mm not accepted	Inspection Report	P	W	R
v)	Testing Destructive	FITTINGS	Properties of Mech. / Chemical & Impact Test	Chemical by Spectro and other test as per ASTM A - 370	As per Heat / Lot	PO & Spec.	MSS-SP-75	IMP Lab Report	P	W	R

APPLICABLE CODES AND SPECIFICATIONS : MEC/TS/05/21/025, R-0 and MEC/TS/05/21/026, R-0 WITH AMENDMENTS									SCOPE OF INSPECTION		
S. NO.	STAGE	COMPONENT	CHARACTERI-STICS	METHOD OF CHECK	QUANTUM OF CHECK	REFERENCE DOCUMENTS	ACCEPTANCE NORMS	RECORD	Vendor/ Sub Vendor	TPI	MECON & Contractor
3.	Final Inspection	FITTINGS	Dimensional	-	As per lot	PO & Spec.	PO & Spec.	Inspection Report	P	W	W / R
4.	Marking	FITTINGS	Identification manufacturer's Name, nominal diameter end thickness malts & Tag No.	By painting	100%	PO & Spec.	-	-	P	W	R
5.	Certification & Release Notes	FITTINGS	Inspection Release Note as per EN 10204 Type 3.2	Verification of PO Spec. & QAP	100%	As per Tender Doc. / Material Specification / STD	As per Tender Doc. / Material Specification / MECON Std	Release Note	R	IR	H / R
6.	Shipping	FITTINGS	Verification of surface coating / type of packing	-	-	As per Tender Doc. / Material Specification / STD	As per Tender Doc. / Material Specification / MECON Std	Shipping documents	P	R	R

APPLICABLE CODES AND SPECIFICATIONS : MEC/TS/05/21/025, R-0 and MEC/TS/05/21/026, R-0 WITH AMENDMENTS									SCOPE OF INSPECTION		
S. NO.	**STAGE**	**COMPONENT**	**CHARACTERI-STICS**	**METHOD OF CHECK**	**QUANTUM OF CHECK**	**REFERENCE DOCUMENTS**	**ACCEPTANCE NORMS**	**RECORD**	**Vendor/ Sub Vendor**	**TPI**	**MECON & Contractor**

Note :

1. All items shall be provided with EN 10204 Type 3.2 certificate.
2. All inspection related documents shall be reviewed (Sign & Stamp) by the Contractor.
3.

Legends : H – Hold (Offer for Witness & obtain clearance), W – Witness, R – Review, A – Approval, I – Information, IR – Issue Release Note, C – Certify, X – Submit, PO – Purchase Order, PR – Purchase Requisition, N-Normalizing, N&T – Normalizing & Tempering, SA – Solution annealing, N & SR – Normalizing & Stress relieving.

All the NDT / Leak Testing / Heat Treatment / Special manufacturing procedures have to be specially approved or only previously approved procedures have to be used. In case of conflict between purchase specification, contract documents and ITP more stringent conditions shall be applicable. The document describes generally the requirements pertaining to all types of Fittings. Requirements specific to the item are only applicable.

APPLICABLE CODES AND SPECIFICATIONS : MEC/TS/05/21/025, R-0 and MEC/TS/05/21/026, R-0 WITH AMENDMENTS									SCOPE OF INSPECTION		
S. NO.	STAGE	CHARACTERISTICS	CATEGORY	METHOD OF CHECK	QUANTUM OF CHECK	REFERENCE DOCUMENTS	ACCEPTANCE NORMS	RECORD	Vendor/ Sub Vendor	TPI	MECON and Contractor
1.	Review of PO / Drg.	Review of PO Doc. / Drg.	Critical	Scrutiny / Verification	Each doc. of P.O.	Appl. Spec. / STD	-	-	P	R	R
2.	Raw Material	1. Manufacturing process of steel 2. Visual 3. Dimensional 4. Chemical Composition	Critical	Verification with M.T.C. Spectro Analysis	Each Heat Each Heat	Appl. Material Specification / STD	As per tender document / Material Specification / STD	Material Test Certificate and MI Register	P	R	R
3.	Forgins	1. Reduction Ratio 2. Temperature During Forging 3. Forging Dimensions	Critical	Measurement Optical Pyrometer Measurement	Minimum 1 per size	Standard Manufacturing Procedure	Std. Procedure As per Std. AMSE B16.5	Forging process record / internal Register	P	R	R
4.	Heat Treatment (as applicable)	Heat Treatment Cycle	Major	Verification of Heat Treatment Cycle	Each Heat / HT Lot	As per Tender Doc. / Material Specification / STD	As per Tender Doc. / Material Specification / MECON Std	T.P.M. Sheet, Heat Treatment Graph	P	W	R
5.	Mechanical Testing (as applicable)	1. Tensile Test (TS, YS, RA%, EL%) 2. Hardness 3. Charpy V-Notch	Major	Tensile Testing IMPACT Testing	One / HT / Lot / Group	As per Tender Doc. / Material Specification / STD	Std. Procedure As per Tender Doc. / Material Specification / MECON Std	Mechanical Test Report & T.C.	P	W	R

APPLICABLE CODES AND SPECIFICATIONS : MEC/TS/05/21/025, R-0 and MEC/TS/05/21/026, R-0 WITH AMENDMENTS									SCOPE OF INSPECTION		
S. NO.	STAGE	CHARACTERISTICS	CATEGORY	METHOD OF CHECK	QUANTUM OF CHECK	REFERENCE DOCUMENTS	ACCEPTANCE NORMS	RECORD	Vendor/ Sub Vendor	TPI	MECON and Contractor
		Test									
6	NDT	1. DP 2. UT 3. MPI	Major	DP Testing Ultrasonic Flaw Detector MPI Testing	100%	As per Tender Doc. / Material Specification / STD	As per Tender Doc. / Material Specification / MECON Std	Mechanical Test Report & T.C.	P	W	R
7.	Final Inspection	Visual & Dimensions	Major	Visual / Measurement	100%	As per Tender Doc. / Material Specification / STD	As per Tender Doc. / Material Specification / MECON Std	Dimension Report Format	P	W	W / R
8.	Making, Colour Coding, Rust Prevension & Packing	Making, Colour Coding, Rust Prevension & Packing	Major	Visual	100%	As per Tender Doc. / Material Specification / STD	As per Tender Doc. / Material Specification / MECON Std	Packing List	P	W	R
10.	Certification & Release Notes	Inspection Release Note as per EN 10204 Type 3.2	Major	Verification of PO Spec. & QAP	100%	As per Tender Doc. / Material Specification / STD	As per Tender Doc. / Material Specification / MECON Std	Release Note	R	IR	H / R
11.	Shipping	Verification of surface coating / type of packing	Major	-	-	As per Tender Doc. / Material Specification / STD	As per Tender Doc. / Material Specification / MECON Std	Shipping documents	P	R	R

APPLICABLE CODES AND SPECIFICATIONS : MEC/TS/05/21/025, R-0 and MEC/TS/05/21/026, R-0 WITH AMENDMENTS									SCOPE OF INSPECTION		
S. NO.	STAGE	CHARACTERISTICS	CATEGORY	METHOD OF CHECK	QUANTUM OF CHECK	REFERENCE DOCUMENTS	ACCEPTANCE NORMS	RECORD	Vendor/ Sub Vendor	TPI	MECON and Contractor

Note :

1. All items shall be provided with EN 10204 Type 3.2 certificate.
2. All inspection related documents shall be reviewed (Sign & Stamp) by the contractor.

Legends : H – Hold (Offer for Witness & obtain clearance), W – Witness, R – Review, A – Approval, I – Information, IR – Issue Release Note, C – Certify, X – Submit, PO – Purchase Order, PR – Purchase Requisition, SR – Stress Relieving, MPI – Magnetic Particle Inspection, DI-Dye Penetrant Test , UT – Ultrasonic examination, TS – Technical Specification, WPS – Welding Procedure Specification, PQR – Procedure Qualification Record, WQT – Welder Qualification Test.

All the NDT / Leak Testing / Heat Treatment / Special manufacturing procedures have to be specially approved or only previously approved procedures have to be used. In case of conflict between purchase specification, contract documents and ITP more stringent conditions shall be applicable. The document describes generally the requirements pertaining to all types of Flanges. Requirements specific to the item are only applicable.

QUALITY ASSURANCE PLAN
FOR
FLANGES

APPLICABLE CODES AND SPECIFICATIONS : MEC/TS/05/21/025, R-0 and MEC/TS/05/21/026, R-0 WITH AMENDMENTS									SCOPE OF INSPECTION		
S. NO.	STAGE	CHARACTERISTICS	CATEGORY	METHOD OF CHECK	QUANTUM OF CHECK	REFERENCE DOCUMENTS	ACCEPTANCE NORMS	RECORD	Vendor/ Sub Vendor	TPI	MECON and Contractor
1.	Review of PO / Drg.	Review of PO Doc. / Drg.	Critical	Scrutiny / Verification	Each doc. of P.O.	Appl. Spec. / STD	-	-	P	R	R
2.	Raw Material	1. Manufacturing process of steel 2. Visual 3. Dimensional 4. Chemical Composition	Critical	Verification with M.T.C. Spectro Analysis	Each Heat Each Heat	Appl. Material Specification / STD	As per tender document / Material Specification / STD	Material Test Certificate and MI Register	P	R	R
3.	Forgins	1. Reduction Ratio 2. Temperature During Forging 3. Forging Dimensions	Critical	Measurement Optical Pyrometer Measurement	Minimum 1 per size	Standard Manufacturing Procedure	Std. Procedure As per Std. AMSE B16.5	Forging process record / internal Register	P	R	R
4.	Heat Treatment (as applicable)	Heat Treatment Cycle	Major	Verification of Heat Treatment Cycle	Each Heat / HT Lot	As per Tender Doc. / Material Specification / STD	As per Tender Doc. / Material Specification / MECON Std	T.P.M. Sheet, Heat Treatment Graph	P	W	R
5.	Mechanical Testing (as applicable)	1. Tensile Test (TS, YS, RA%, EL%) 2. Hardness 3. Charpy V-Notch	Major	Tensile Testing IMPACT Testing	One / HT / Lot / Group	As per Tender Doc. / Material Specification / STD	Std. Procedure As per Tender Doc. / Material Specification / MECON Std	Mechanical Test Report & T.C.	P	W	R

APPLICABLE CODES AND SPECIFICATIONS : MEC/TS/05/21/025, R-0 and MEC/TS/05/21/026, R-0 WITH AMENDMENTS									SCOPE OF INSPECTION		
S. NO.	STAGE	CHARACTERISTICS	CATEGORY	METHOD OF CHECK	QUANTUM OF CHECK	REFERENCE DOCUMENTS	ACCEPTANCE NORMS	RECORD	Vendor/ Sub Vendor	TPI	MECON and Contractor
		Test									
6	NDT	1. DP 2. UT 3. MPI	Major	DP Testing Ultrasonic Flaw Detector MPI Testing	100%	As per Tender Doc. / Material Specification / STD	As per Tender Doc. / Material Specification / MECON Std	Mechanical Test Report & T.C.	P	W	R
7.	Final Inspection	Visual & Dimensions	Major	Visual / Measurement	100%	As per Tender Doc. / Material Specification / STD	As per Tender Doc. / Material Specification / MECON Std	Dimension Report Format	P	W	W / R
8.	Making, Colour Coding, Rust Prevension & Packing	Making, Colour Coding, Rust Prevension & Packing	Major	Visual	100%	As per Tender Doc. / Material Specification / STD	As per Tender Doc. / Material Specification / MECON Std	Packing List	P	W	R
10.	Certification & Release Notes	Inspection Release Note as per EN 10204 Type 3.2	Major	Verification of PO Spec. & QAP	100%	As per Tender Doc. / Material Specification / STD	As per Tender Doc. / Material Specification / MECON Std	Release Note	R	IR	H / R
11.	Shipping	Verification of surface coating / type of packing	Major	-	-	As per Tender Doc. / Material Specification / STD	As per Tender Doc. / Material Specification / MECON Std	Shipping documents	P	R	R

APPLICABLE CODES AND SPECIFICATIONS : MEC/TS/05/21/025, R-0 and MEC/TS/05/21/026, R-0 WITH AMENDMENTS									SCOPE OF INSPECTION		
S. NO.	STAGE	CHARACTERISTICS	CATEGORY	METHOD OF CHECK	QUANTUM OF CHECK	REFERENCE DOCUMENTS	ACCEPTANCE NORMS	RECORD	Vendor/ Sub Vendor	TPI	MECON and Contractor

Note :

1. All items shall be provided with EN 10204 Type 3.2 certificate.
2. All inspection related documents shall be reviewed (Sign & Stamp) by the contractor.

Legends : H – Hold (Offer for Witness & obtain clearance), W – Witness, R – Review, A – Approval, I – Information, IR – Issue Release Note, C – Certify, X – Submit, PO – Purchase Order, PR – Purchase Requisition, SR – Stress Relieving, MPI – Magnetic Particle Inspection, DI-Dye Penetrant Test , UT – Ultrasonic examination, TS – Technical Specification, WPS – Welding Procedure Specification, PQR – Procedure Qualification Record, WQT – Welder Qualification Test.

All the NDT / Leak Testing / Heat Treatment / Special manufacturing procedures have to be specially approved or only previously approved procedures have to be used. In case of conflict between purchase specification, contract documents and ITP more stringent conditions shall be applicable. The document describes generally the requirements pertaining to all types of Flanges. Requirements specific to the item are only applicable.

FORM NO. 11.20(4.4)F-09 REV-0

CONTRACTOR		**QUALITY ASSURANCE PLAN FOR** STRUCTURAL AND MECHANICAL EQUIPMENT	PROJECT :
ORDER NO. & DATE			PACKAGE NO.:05/51/U999/GAIL/002
SUB-CONTRACTOR			PACKAGE NAME : **Ball Valve, Plug Valve, Globe Valve**
ORDER NO. & DATE			

INSTRUCTIONS FOR FILLING UP :

1. QAP shall be submitted for each of the equipment separately with break up of assembly/sub-assembly & part/component or for group of equipment having same specification.
2. Use numerical codes as indicated for extent of inspection & tests and submission of test certificates & documents. Additional codes & description for extent of inspection & tests may be added as applicable for the plant and equipment
3. Separate identification number with quantity for equipment shall be indicated wherever equipment having same specifications belonging to different facilities are grouped together.
4. Weight in kilograms must be indicated under Column-5 for each item. Estimated weights may be indicated wherever actual weights are not available.

ABBREVIATIONS USED :

SV : SUB VENDOR
MFR : MANUFACTURER
TPI : DESIGNATED THIRD PARTY INSPECTION AGENCY
H : HOLD
R : REVIEW
W : WITNESS

KEY TO SYMBOLS :

* : TO BE FILLED BY VENDOR
** : TEST TO BE PERFORMED, IF APPLICABLE

CODES FOR EXTENT OF INSPECTION, TESTS, TEST CERTIFICATES & DOCUMENTS :

Code Description
1. Visual
2. Dimensional
3. Fitment & Alignment
4. Physical Test (Sample)
5. Chemical Test (Sample)
6. Ultrasonic Test
7. Magnetic Particle Test (MPI)
8. Radiography Test
9. Dye Penetration Test
10. Metallographic Exam.
11. Welder's Qualification & Weld Procedure Test
12. Approval of Test and Repai Procedure
13. Heat Treatment
14. Pressure Test
15. Leakage Test
16. Balancing
17. Vibration Test

Code escription
18. Amplitude Test
19. Sponge Test
20. Dust/ Water Ingress Test
21. Friction Factor Test
22. Adhesion Test
23. Performance Test/Characteristic Curve
24. No Load/ Free Running Test
25. Load/ Overload Test
26. Measurement of Speeds
27. Accoustical Test
28. Geometrical Accuracy
29. Repeatability and Positioning Accuracy
30. Proving Test
31. Surface Preparation
32. Manufacturer's Test Certificates for bought-out items
33. IBR/ Other Statutory agencies compliance certificate

Code Description
34. Internal Inspection Report by Contractor
35. Hardness Test
36. Spark Test for Lining
37. Calibration
38. Safety Device Test
39. Ease of Maintenance
40. Fire Test (Type Test)
41. Charpy V-Notch Test
42. Operational Torque Test
43. ENP (Electroless Nickel Plating) Execution
44. Painting
45. Anti-Static Test
46. Hydrostatic Double Block & Bleed Test
47. Functional Test
48. Pneumatic Double Block & Bleed Test
49. Cyclic Test
50 STRIP TEST

Code DOCUMENTS:
D1. Approved GA drawings
D2. Information and other reference drg/ stamped drgs released for mfg.
D3. Relevant catalogues
D4. Bill of matl./Item no./ Identification
D5. Matchmarks details
D6. Line/ Layout diagram
D7. Approved erection procedures
D8. Unpriced sub P.O. with specification and amend-ments, if any
D9. Calibration Certificate of all measuring instruments and gauges
D10. X-Ray Reports

EQUIPMENT DETAILS							INSPECTION AND TESTS										
Sl. No.	Description (with equipment heading, place of use and brief specifications)	Identification No. (MR/SOR Item No.)	Quantity No./M	Unit Weight (Kg)	Manufacturer's Name and Address	Expected Schedule of Final Inspn.	Raw Material and In-Process Stage Inspection				Final Inspection/ Test by				Test Certificates & Documents to be submitted to MECON	Acceptance Criteria Standards/ IS/ BS/ ASME/ MECON TS / API /Normsand DOCUMENTS:	REMARKS/ SAMPLING PLAN
							MFR/SV	TPIA	CONTR	MECON	MFR/SV	TPIA	CONTR	MECON			
1	2	3	4	5	6	7	8	9	10	11	12	13	14	15	14	15	16
1.0	Ball Valve, Plug Valve, Globe Valve		Refer (MR/SOR)	*	*	*	As per attached sheet 2 to 10										

QAP NO. MEC/U999/05/28/M/001/QAP-002	REV **0**
SHEET 1 OF 10	

For CONTRACTOR

For SUB-CONTRACTOR (Valve Manufacturer)

EQUIPMENT DETAILS					INSPECTION AND TESTS								Test Certificates & Documents to be submitted to MECON	Acceptance Criteria Standards/ IS/ BS/ ASME/ MECON TS / API /Normsand DOCUMENTS:	Inspection Codes & Sampling Plan				REMARKS
Sl. No.	cription (with equipm ing, place of use and specifications)	Identification No.	Quantity No./M	Unit Weight (Kg)	Raw Material and In-Process stage inspection				Final Inspection/ Test by										
					MFR/SV	TPIA	CONTR	MECON	MFR/SV	TPIA	CONTR	MECON			MFR/SV	TPIA	CONTR	MECON	
1	2	3	4	5	8	9	10	11	12	13	14	15	14	15	16A	16B	16C	16D	
1.01	Body	Material As per MR/SOR/ Alternate Material accepted by MECON			1,2	1,2	-	-	-	-	-	-	1. D1 2. Report	1. D1 2. MECON's TS & DS 3. Relevant Material Standard 4. Manufacturer's Specification	P	R	R	R	
					4	4	-	-	-	-	-	-	Material Test Certificates	1. Relevant Material Standard 2. MECON's TS & D.S.	P	W	R	R	
					5	5	-	-	-	-	-	-	Material Test Certificates	1. Relevant Material Standard 2. MECON's T.S. 3. MECON's D.S.	P	W	R	R	
					6 **	6 **	-	-	-	-	-	-	Test Report	1. ASME B16.34, Appendix-IV 2. MECON's T.S. & DS	P	W	R	R	Forgings, welds, wrought weld ends
					7 **	7 **	-	-	-	-	-	-	Test Report	1. ASME B16.34, Appendix-II 2. MECON's T.S. & DS	P	W	R	R	Wet MPI for 100% of internal surfaces of all castings & forgings & bevel surfaces (MPI/ DP)
					8 **	8 **	-	-	-	-	-	-	Test Report	1. ASME B16.34, Appendix-I 2. MECON's T.S.& DS	P	W	R	R	All castings as per clause 5.1.4 b) of T.S., all welds, weld ends of all cast
					9**	9**	-	-	-	-	-	-	Test Report	1. ASME B16.34, Appendix-III 2. MECON's T.S.& DS	P	W	R	R	Bevel Surfaces (by MPI/ DP)
					13	13	-	-	-	-	-	-	Report/ Material Test Certificates	1. Relevant Material Standard 2. MECON's T.S.& DS	P	R	R	R	
					35	35	-	-	-	-	-	-	Material Test Certificates	1. Relevant Material Standard 2. MECON's T.S. 3. MECON's D.S.	P	W	R	R	
					41	41	-	-	-	-	-	-	Material Test Certificates	1. Relevant Material Standard 2. MECON's T.S. 3. MECON's D.S.	P	W	R	R	

QAP No. : MEC/U999/05/28/M/001/QAP-002

FORM NO. 11.20(4.4)F-09 REV-0

EQUIPMENT DETAILS					INSPECTION AND TESTS								Test Certificates & Documents to be submitted to MECON	Acceptance Criteria Standards/ IS/ BS/ ASME/ MECON TS / API /Normsand DOCUMENTS:	Inspection Codes & Sampling Plan				REMARKS
Sl. No.	cription (with equipm ling, place of use and specifications)	Identification No.	Quantity No./M	Unit Weight (Kg)	Raw Material and In-Process stage inspection				Final Inspection/ Test by										
					MFR/SV	TPIA	CONTR	MECON	MFR/SV	TPIA	CONTR	MECON			MFR/SV	TPIA	CONTR	MECON	
1	2	3	4	5	8	9	10	11	12	13	14	15	14	15	16A	16B	16C	16D	
1.02	Closure/ Body Adapter/ Tail Piece / Bonnet	Material Manufacturer to indicate (to be approved by MECON)			1,2	-	-	-	-	-	-	-	1. D1 2. Report	1. D1 2. MECON's TS & DS 3. Relevant Material Standard 4. Manufacturer's Specification	P	R	R	R	
					4	4	-	-	-	-	-	-	Material Test Certificates	1. Relevant Material Standard 2. MECON's D.S.& TS	P	W	R	R	
					5	5	-	-	-	-	-	-	Material Test Certificates	1. Relevant Material Standard 2. MECON's T.S. 3. MECON's D.S.	P	W	R	R	
					6**	6**	-	-	-	-	-	-	Test Report	1. ASME B16.34, Appendix-IV 2. MECON's T.S. & DS	P	W	R	R	Forgings, welds, wrought weld ends
					7**	7**	-	-	-	-	-	-	Test Report	1. ASME B16.34, Appendix-II 2. MECON's T.S. & DS	P	W	R	R	Wet MPI for 100% of internal surfaces of all castings & forgings & bevel surfaces (MPI/ DP)
					8**	8**	-	-	-	-	-	-	Test Report	1. ASME B16.34, Appendix-I 2. MECON's T.S.& DS	P	W	R	R	All castings as per clause 5.1.4 b) of T.S., all welds, weld ends of all cast
					9**	9**	-	-	-	-	-	-	Test Report	1. ASME B16.34, Appendix-III 2. MECON's T.S. & D.S.	P	W	R	R	Bevel Surfaces (by MPI/ DP)
					13	13	-	-	-	-	-	-	Report/ Material Test Certificates	1. Relevant Material Standard 2. MECON's T.S. 3. MECON's D.S.	P	R	R	R	
					35	35	-	-	-	-	-	-	Material Test Certificates	1. Relevant Material Standard 2. MECON's T.S. 3. MECON's D.S.	P	W	R	R	
					41	41	-	-	-	-	-	-	Material Test Certificates	1. Relevant Material Standard 2. MECON's T.S. 3. MECON's D.S.	P	W	R	R	

EQUIPMENT DETAILS					INSPECTION AND TESTS								Test Certificates & Documents to be submitted to MECON	Acceptance Criteria Standards/ IS/ BS/ ASME/ MECON TS / API /Normsand DOCUMENTS:	Inspection Codes & Sampling Plan				REMARKS
					Raw Material and In-Process stage inspection				Final Inspection/ Test by										
Sl. No.	cription (with equipm ing, place of use and specifications)	Identification No.	Quantity No./M	Unit Weight (Kg)	MFR/SV	TPIA	CONTR	MECON	MFR/SV	TPIA	CONTR	MECON			MFR/SV	TPIA	CONTR	MECON	
1	2	3	4	5	8	9	10	11	12	13	14	15	14	15	16A	16B	16C	16D	
1.03	Top Cover/Disc / Hinge Pin (For Check Valves)	Material Manufacturer to indicate (to be approved by MECON)			1,2	-	-	-	-	-	-	-	1. D1 2. Report	1. D1 2. MECON's TS & DS 3. Relevant Material Standard 4. Manufacturer's Specification	P	R	R	R	
					4	4	-	-	-	-	-	-	Material Test Certificates	1. Relevant Material Standard 2. MECON's D.S. & T.S.	P	W	R	R	
					5	5	-	-	-	-	-	-	Material Test Certificates	1. Relevant Material Standard 2. MECON's T.S. 3. MECON's D.S.	P	W	R	R	
					6 **	6 **	-	-	-	-	-	-	Test Report	1. ASME B16.34, Annex-E 2. MECON's T.S. & D.S.	P	W	R	R	Forgings, welds, wrought weld ends
					7 **	7 **	-	-	-	-	-	-	Test Report	1. ASME B16.34, Annex-C 2. MECON's T.S. & D.S.	P	W	R	R	Wet MPI for 100% of internal surfaces of all castings & forgings & bevel surfaces (MPI/ DP)
					8 **	8 **	-	-	-	-	-	-	Test Report	1. ASME B16.34 Annex-B 2. MECON's T.S. 3. MECON's D.S.	P	W	R	R	All castings as per clause 5.1.4 b) of T.S., all welds, weld ends of all cast
					13	13	-	-	-	-	-	-	Report/ Material Test Certificates	1. Relevant Material Standard 2. MECON's T.S. 3. MECON's D.S.	P	R	R	R	
					35	35	-	-	-	-	-	-	Material Test Certificates	1. Relevant Material Standard 2. MECON's T.S. 3. MECON's D.S.	P	W	R	R	
					41	41	-	-	-	-	-	-	Material Test Certificates	1. Relevant Material Standard 2. MECON's T.S. 3. MECON's D.S.	P	W	R	R	

EQUIPMENT DETAILS					INSPECTION AND TESTS								Test Certificates & Documents to be submitted to MECON	Acceptance Criteria Standards/ IS/ BS/ ASME/ MECON TS / API /Normsand DOCUMENTS:	Inspection Codes & Sampling Plan				REMARKS
Sl. No.	cription (with equipm ing, place of use and specifications)	Identification No.	Quantity No./M	Unit Weight (Kg)	Raw Material and In-Process stage inspection				Final Inspection/ Test by										
					MFR/SV	TPIA	CONTR	MECON	MFR/SV	TPIA	CONTR	MECON			MFR/SV	TPIA	CONTR	MECON	
1	2	3	4	5	8	9	10	11	12	13	14	15	14	15	16A	16B	16C	16D	
1.04	Trunnion (for Trunnion Mounted Valves)	Material Manufacturer to indicate (to be approved by MECON)			1,2	1,2	-	-	-	-	-	-	1. D1 2. Report	1. D1 2. MECON's TS & DS 3. Relevant Material Standard 4. Manufacturer's Specification	P	R	R	R	
					4	4	-	-	-	-	-	-	Material Test Certificates	1. Relevant Material Standard 2. MECON's D.S. & T.S.	P	W	R	R	
					5	5	-	-	-	-	-	-	Material Test Certificates	1. Relevant Material Standard 2. MECON's T.S. 3. MECON's D.S.	P	W	R	R	
					13	13	-	-	-	-	-	-	Report/ Material Test Certificates	1. Relevant Material Standard 2. MECON's T.S. 3. MECON's D.S.	P	R	R	R	
					43 **	43 **	-	-	-	-	-	-	1. Test Report 2. Material Test Certificates for composition, hardness, thickness & integrity	1. MECON's T.S. 2. MECON's D.S. 3. ASTM B733 Std. 4. Manufacturer's Specification	P	H	R	R	
1.05	Ball /Disc / Plug / Obturator	Material As per MR/ Alternate Material accepted by MECON			1,2	1,2	-	-	-	-	-	-	1. D1 2. Report	1. D1 2. MECON's TS & DS 3. Relevant Material Standard 4. Manufacturer's Specification	P	R	R	R	
					4	4	-	-	-	-	-	-	Material Test Certificates	1. Relevant Material Standard 2. MECON's D.S. & T.S.	P	W	R	R	
					5	5	-	-	-	-	-	-	Material Test Certificates	1. Relevant Material Standard 2. MECON's T.S. 3. MECON's D.S.	P	W	R	R	
					6**	6**	-	-	-	-	-	-	Test Report	1. ASME B16.34, Appendix-IV 2. MECON's T.S. 3. MECON's D.S.	P	W	R	R	Forgings, welds, wrought weld ends
					7**	7**	-	-	-	-	-	-	Test Report	1. ASME B16.34, Appendix-II 2. MECON's T.S. 3. MECON's D.S.	P	W	R	R	Wet MPI for 100% of internal surfaces of all castings & forgings & bevel

EQUIPMENT DETAILS					INSPECTION AND TESTS								Test Certificates & Documents to be submitted to MECON	Acceptance Criteria Standards/ IS/ BS/ ASME/ MECON TS / API /Normsand DOCUMENTS:	Inspection Codes & Sampling Plan				REMARKS
Sl. No.	cription (with equipm ing, place of use and specifications)	Identification No.	Quantity No./M	Unit Weight (Kg)	Raw Material and In-Process stage inspection				Final Inspection/ Test by										
					MFR/SV	TPIA	CONTR	MECON	MFR/SV	TPIA	CONTR	MECON			MFR/SV	TPIA	CONTR	MECON	
1	2	3	4	5	8	9	10	11	12	13	14	15	14	15	16A	16B	16C	16D	
					8**	8**	-	-	-	-	-	-	Test Report	1. ASME B16.34, Appendix-I 2. MECON's T.S. 3. MECON's D.S.	P	W	R	R	All castings as per clause 5.1.4 b) of T.S., all welds, weld ends of all cast valves
					9**	9**	-	-	-	-	-	-	Test Report	1. ASME B16.34, Appendix-III 2. MECON's T.S. 3. MECON's D.S.	P	W	R	R	Bevel Surfaces (by MPI/ DP)
					13	13	-	-	-	-	-	-	Report/ Material Test Certificates	1. Relevant Material Standard 2. MECON's T.S. 3. MECON's D.S.	P	R	R	R	
					35	35	-	-	-	-	-	-	Material Test Certificates	1. Relevant Material Standard 2. MECON's T.S. 3. MECON's D.S.	P	W	R	R	
					41	41	-	-	-	-	-	-	Material Test Certificates	1. Relevant Material Standard 2. MECON's T.S. 3. MECON's D.S.	P	W	R	R	
					43	43	-	-	-	-	-	-	1. Test Report 2. Material Test Certificates for composition, hardness, thickness & integrity	1. MECON's T.S. 2. MECON's D.S. 3. ASTM B733 Std. 4. Manufacturer's Specification	P	W	R	R	
1.06	Stem	Material As per MR/ Alternate Material accepted by MECON			1,2	1,2	-	-	-	-	-	-	1. D1 2. Report	1. D1 2. MECON's TS & DS 3. Relevant Material Standard 4. Manufacturer's Specification	P	R	R	R	
					4	4	-	-	-	-	-	-	Material Test Certificates	1. Relevant Material Standard 2. MECON's D.S. & T.S.	P	W	R	R	
					5	5	-	-	-	-	-	-	Material Test Certificates	1. Relevant Material Standard 2. MECON's T.S. 3. MECON's D.S.	P	W	R	R	
					6**	6**	-	-	-	-	-	-	Test Report	1. ASME B16.34, Appendix-IV 2. MECON's T.S. 3. MECON's D.S.	P	W	R	R	Forgings, welds, wrought weld ends

EQUIPMENT DETAILS					INSPECTION AND TESTS								Test Certificates & Documents to be submitted to MECON	Acceptance Criteria Standards/ IS/ BS/ ASME/ MECON TS / API /Normsand DOCUMENTS:	Inspection Codes & Sampling Plan				REMARKS
Sl. No.	cription (with equipm ing, place of use and specifications)	Identification No.	Quantity No./M	Unit Weight (Kg)	Raw Material and In-Process stage inspection				Final Inspection/ Test by										
					MFR/SV	TPIA	CONTR	MECON	MFR/SV	TPIA	CONTR	MECON			MFR/SV	TPIA	CONTR	MECON	
1	2	3	4	5	8	9	10	11	12	13	14	15	14	15	16A	16B	16C	16D	
					7**	7**	-	-	-	-	-	-	Test Report	1. ASME B16.34, Appendix-II 2. MECON's T.S. 3. MECON's D.S.	P	W	R	R	Wet MPI for 100% of internal surfaces of all castings & forgings & bevel
					8**	8**	-	-	-	-	-	-	Test Report	1. ASME B16.34, Appendix-I 2. MECON's T.S. 3. MECON's D.S.	P	W	R	R	All castings as per clause 5.1.4 b) of T.S., all welds, weld ends of all cast
					9**	9**	-	-	-	-	-	-	Test Report	1. ASME B16.34, Appendix-III 2. MECON's T.S. 3. MECON's D.S.	P	W	R	R	Bevel Surfaces (by MPI/ DP)
					13	13	-	-	-	-	-	-	Report/ Material Test Certificates	1. Relevant Material Standard 2. MECON's T.S.& DS	P	R	R	R	
					35	35	-	-	-	-	-	-	Material Test Certificates	1. Relevant Material Standard 2. MECON's T.S. 3. MECON's D.S.	P	W	R	R	
					41	41	-	-	-	-	-	-	Material Test Certificates	1. Relevant Material Standard 2. MECON's T.S. 3. MECON's D.S.	P	W	R	R	
					43	43	-	-	-	-	-	-	1. Test Report 2. Material Test Certificates for composition, hardness, thickness & integrity	1. MECON's T.S. 2. MECON's D.S. 3. ASTM B733 Std. 4. Manufacturer's Specification	P	W	R	R	
1.07	Metal Seats / Retainer Ring (If provided)	Material As per MR/ Alternate Material accepted by MECON			1,2	1,2	-	-	-	-	-	-	1. D1 2. Report	1. D1 2. MECON's TS & DS 3. Relevant Material Standard 4. Manufacturer's Specification	P	R	R	R	
					4	4	-	-	-	-	-	-	Material Test Certificates	1. Relevant Material Standard 2. MECON's D.S. & T.S.	P	W	R	R	
					5	5	-	-	-	-	-	-	Material Test Certificates	1. Relevant Material Standard 2. MECON's T.S. 3. MECON's D.S.	P	W	R	R	

EQUIPMENT DETAILS					INSPECTION AND TESTS								Test Certificates & Documents to be submitted to MECON	Acceptance Criteria Standards/ IS/ BS/ ASME/ MECON TS / API /Normsand DOCUMENTS:	Inspection Codes & Sampling Plan				REMARKS
Sl. No.	cription (with equipm ing, place of use and specifications)	Identification No.	Quantity No./M	Unit Weight (Kg)	Raw Material and In-Process stage inspection				Final Inspection/ Test by										
					MFR/SV	TPIA	CONTR	MECON	MFR/SV	TPIA	CONTR	MECON			MFR/SV	TPIA	CONTR	MECON	
1	2	3	4	5	8	9	10	11	12	13	14	15	14	15	16A	16B	16C	16D	
					6**	6**	-	-	-	-	-	-	Test Report	1. ASME B16.34, Appendix-IV 2. MECON's T.S. 3. MECON's D.S.	P	W	R	R	Forgings, welds, wrought weld ends
					7**	7**	-	-	-	-	-	-	Test Report	1. ASME B16.34, Appendix-II 2. MECON's T.S. 3. MECON's D.S.	P	W	R	R	Wet MPI for 100% of internal surfaces of all castings & forgings & bevel surfaces (MPI/ DP)
					8**	8**	-	-	-	-	-	-	Test Report	1. ASME B16.34, Appendix-I 2. MECON's T.S. 3. MECON's D.S.	P	W	R	R	All castings as per clause 5.1.4 b) of T.S., all welds, weld ends of all cast
					9**	9**	-	-	-	-	-	-	Test Report	1. ASME B16.34, Appendix-III 2. MECON's T.S. 3. MECON's D.S.	P	W	R	R	Bevel Surfaces (by MPI/ DP)
					13	13	-	-	-	-	-	-	Report/ Material Test Certificates	1. Relevant Material Standard 2. MECON's T.S. & D.S.	P	R	R	R	
					35	35	-	-	-	-	-	-	Material Test Certificates	1. Relevant Material Standard 2. MECON's T.S. 3. MECON's D.S.	P	W	R	R	
					41	41	-	-	-	-	-	-	Material Test Certificates	1. Relevant Material Standard 2. MECON's T.S. 3. MECON's D.S.	P	W	R	R	
					43	43	-	-	-	-	-	-	1. Test Report 2. Material Test Certificates for composition, hardness, thickness & integrity	1. MECON's T.S. 2. MECON's D.S. 3. ASTM B733 Std. 4. Manufacturer's Specification	P	W	R	R	
1.08	Bolting Material (Stud	Material As per MR/ Alternate Material accepted			1,2	1,2	-	-	-	-	-	-	1. D1 2. Report	1. D1 2. MECON's T.S. & D.S. 3. Relevant Material Standard 4. Manufacturer's Specification	P	R	R	R	Alongwith thickness measurement for ENP Coating.
		by MECON			4	4	-	-	-	-	-	-	Material Test Certificates	1. Relevant Material Standard 2. MECON's D.S. & T.S.	P	W	R	R	

EQUIPMENT DETAILS					INSPECTION AND TESTS								Test Certificates & Documents to be submitted to MECON	Acceptance Criteria Standards/ IS/ BS/ ASME/ MECON TS / API /Normsand DOCUMENTS:	Inspection Codes & Sampling Plan				REMARKS
Sl. No.	cription (with equipm ing, place of use and specifications)	Identification No.	Quantity No./M	Unit Weight (Kg)	Raw Material and In-Process stage inspection				Final Inspection/ Test by										
					MFR/SV	TPIA	CONTR	MECON	MFR/SV	TPIA	CONTR	MECON			MFR/SV	TPIA	CONTR	MECON	
1	2	3	4	5	8	9	10	11	12	13	14	15	14	15	16A	16B	16C	16D	
					5	5	-	-	-	-	-	-	Material Test Certificates	1. Relevant Material Standard 2. MECON's T.S. 3. MECON's D.S.	P	H	R	R	
					6**	6**	-	-	-	-	-	-	Test Report	1. ASME B16.34, Appendix-IV 2. MECON's T.S. 3. MECON's D.S.	P	W	R	R	Forgings, welds, wrought weld ends
					7**	7**	-	-	-	-	-	-	Test Report	1. ASME B16.34, Appendix-II 2. MECON's T.S. 3. MECON's D.S.	P	W	R	R	Wet MPI for 100% of internal surfaces of all castings & forgings & bevel surfaces (MPI/ DP)
					8**	8**	-	-	-	-	-	-	Test Report	1. ASME B16.34, Appendix-I 2. MECON's T.S. 3. MECON's D.S.	P	W	R	R	All castings as per clause 5.1.4 b) of T.S., all welds, weld ends of all cast valves
					9**	9**	-	-	-	-	-	-	Test Report	1. ASME B16.34, Appendix-III 2. MECON's T.S.	P	W	R	R	Bevel Surfaces (by MPI/ DP)
					13	13	-	-	-	-	-	-	Report/ Material Test Certificates	1. Relevant Material Standard 2. MECON's T.S. & D.S.	P	R	R	R	
					41	41	-	-	-	-	-	-	Material Test Certificates	1. Relevant Material Standard 2. MECON's T.S. 3. MECON's D.S.	P	W	R	R	
1.09	Assembled Valves				-	-	-	-	1,2	1,2	-	-	Report	1. D1 2. MECON's T.S.	P	W	R	R	
					-	-	-	-	3	3	-	-	Report		P	W	R	R	
					-	-	-	-	14	14	-	-	1. Report 2. Test Certificates	1. D1 2. MECON's T.S. 3. MECON's D.S. 4. Applicable Standard	P	W	R	R	
					-	-	-	-	15	15	-	-	1. Report 2. Test Certificates	1. D1 2. MECON's T.S. 3. MECON's D.S. 4. Applicable Standard	P	W	R	R	
							-	-	40	40	-	-	1. Report 2. Test Certificates	1. D1 2. MECON's T.S. 3. MECON's D.S. 4. Applicable Standard	P	R	R	R	

EQUIPMENT DETAILS					INSPECTION AND TESTS								Test Certificates & Documents to be submitted to MECON	Acceptance Criteria Standards/ IS/ BS/ ASME/ MECON TS / API /Normsand DOCUMENTS:	Inspection Codes & Sampling Plan				REMARKS
Sl. No.	cription (with equipm ing, place of use and specifications)	Identification No.	Quantity No./M	Unit Weight (Kg)	Raw Material and In-Process stage inspection				Final Inspection/ Test by										
					MFR/SV	TPIA	CONTR	MECON	MFR/SV	TPIA	CONTR	MECON			MFR/SV	TPIA	CONTR	MECON	
1	2	3	4	5	8	9	10	11	12	13	14	15	14	15	16A	16B	16C	16D	
							-	-	42 **	42 **	-	-	1. Report 2. Test Certificates	1. D1 2. MECON's T.S. 3. MECON's D.S. 4. Applicable Standard	P	W	R	R	If Applicable
					-	-	-	-	37	37	-	-	Certificates		-	R	R	R	
					-	-	-	-	44	44	-	-	1. Report 2. Test Certificates	1. D1 2. MECON's T.S. 3. MECON's D.S. 4. Applicable Standard	P	W	R	R	
					-	-	-	-	45 **	45 **	-	-	1. Report 2. Test Certificates	1. D1 2. MECON's T.S. 3. MECON's D.S. 4. Applicable Standard	P	W	R	R	If Applicable
					-	-	-	-	46 **	46 **	-	-	1. Report 2. Test Certificates	1. D1 2. MECON's T.S. 3. MECON's D.S. 4. Applicable Standard	P	W	R	R	If Applicable
					-	-	-	-	47	47	-	-	1. Report 2. Test Certificates	1. D1 2. MECON's T.S. 3. MECON's D.S. 4. Applicable Standard	P	W	R	R	Refer Note 3 of Table 2 of TS no. MEC/ TS / 05 / E5 / 002A
					-	-	-	-	48 **	48 **	-	-	1. Report 2. Test Certificates	1. D1 2. MECON's T.S. 3. MECON's D.S. 4. Applicable Standard	P	W	R	R	If Applicable
					-	-	-	-	49 **	49 **	-	-	1. Report 2. Test Certificates	1. D1 2. MECON's T.S. 3. MECON's D.S. 4. Applicable Standard	P	W	R	R	If Applicable
					-	-	-	-	50	50	-	-	1. Final Report 2. Final Certificates	1. D1 2. MECON's T.S. 3. MECON's D.S. 4. Applicable Standard	P	W	R	R	One valve per size per rating
1.10	Complete documentation check and compilation				-	-	-	-	-	-	-	-	1. Final Report 2. Final Certificates	1. D1 2. MECON's T.S. 3. MECON's D.S. 4. Applicable Standard	P	H	R	R	
1.11	Issue I.C. / I.R.N and give Dispatch clearance				-	-	-	-	-	-	-	-	1. Final Report 2. Final Certificates	1. D1 2. MECON's T.S. 3. MECON's D.S. 4. Applicable Standard	R	P	R	R	
1.12	Actuator Tests (If Applicable)					**As per Actuator Quality Assurance Plan (to be submitted by vendor for approval)**													

1) Vendor shall establish approved WPS-PQR-WPQ for the weldings duly witnessed by TPIA (Applicable for fully welded body valves OR valves with welded pup pieces forsize 2" and above only).
2) Vendor shall do RT for Body adapter to PUP piece welding and RT report shall be reviewed by MECON & TPIA (Applicable for valves with welded pup pieces for size 2" and above only)
3) Vendor shall do UT/RT for Bodt to Body adapter welding witnessed by TPIA (Applicable for fully welded body valves only)

For CONTRACTOR

For SUB-CONTRACTOR
(Valve Manufacturer)

QAP NO.: MEC/WINO/05/28/M/001/QAP-002	REV **0**

DATA SHEET FOR BW BALL VALVES

1.0 Valve Manufacturer :

2.0 Valve Size (NB), mm (inch) : 8", 6", 4" & 2" NB ANSI Rating : 300# Design Standard : **API 6D**

3.0 MECON's Technical Specification No. : **MEC/TS/05/21/002, Rev-1, Ed-1**

4.0 Connecting Pipeline Design Pressure, bar : **49** Design Temperature, °C : **-29°C to + 65°C**

5.0 **Connecting Pipe Specification** :

	For 8"	For 6"	For 4"	For 2"
5.1 Material	API 5L X-52 PSL-2	API 5L X-52, PSL-2	API 5L X-52, PSL-2	ASTM A106, Gr. B
5.2 Diameter (OD), mm (inch)	219.1	168.3	114.3	60.3
5.3 Thickness, mm	6.4	6.4	6.4	5.54

6.0 **Valve Construction Design**

6.1. Configuration : Reduced Bore [ ] Full Bore [√]

6.2. End Connections : Flanged as per ASME B16.5 [ ] Butt Welded as per ASME B16.25 [√]

6.3. Flanges (wherever applicable) : a) RF [ ] [ ] RT [ ] NA [√]

b) Serrated [ ] Smooth (125 to 200 microinches AARH) [ ] NA [√]

6.4 Ball Mounting : **Floating Ball type (for 2" & 4" Valves) and Trunion Mounted type (for6" & 8" Valves)**

6.5 Valve body type : Fully Welded [ ] Two/Three Piece Bolted [ ] Either [√]

7.0 **Valve Material Specification**

	Part	Specified Material	Material Offered (Equivalent or superior)
7.1	Body	**A 216 Gr. WCB/A 234 Gr. WPB**	
7.2	Ball	**(A 216 Gr.WCB/A 234 Gr.WPB)+75 µENP coating/AISI410**	
7.3	Body Seat Rings (No Casting)	**AISI 4140 + 75 micron ENP coating/AISI 410**	
7.4	Seat Seal	**VITON/DEVLON**	
7.5	Stem (No casting)	**AISI 4140 + 75 micron ENP coating/AISI 410**	
7.6	Stem Seals	**VITON/PTFE**	
7.7	Stud Bolts/ Nuts	**ASTM A 193 Gr. B7/ A194 Gr. 2H**	

8.0 Corrosion Allowance : **1.5 mm** Service : **Natural Gas**

9.0 Location : Above Ground [√] Buried [ ]

10.0 Stem Extension Requirement : Yes [ ] No [√] Length of Stem Extension, m : NA

11.0 Gear Operator Requirement : Yes [√] (for 6" & 8"Valves) No [√] (for 2" & 4" Valves)

12.0 Actuator Requirement : Yes [ ] No [√]

13.0 Fire Resistant Design Requirement : **Type test as per API 6 FA/ API 607**

14.0 **Valve Testing Requirement**

			Test Pressure (min.), kg/cm^2(g)	Minimum Duration, minutes			
				For 8"	For 6"	For 4"	For 2"
14.1	Hydrostatic Test	Body	**76**	**5**	**5**	**2**	**2**
		Seat	**57**	**5**	**5**	**2**	**2**
14.2	Air Test		**5.6-7**	**5**	**5**	**2**	**2**

15.0 Anti-Static Testing Requirement : **As per Standard API 6D (Latest Ed.)**

16.0 **Valve Painting Specification**

16.1 Surface preparation by Short Blasting as per grade SA 2 1/2, Swedish Standard SIS-055 909.

16.2 For above ground installation-Three coats of corrosion resistant paint shall be applied with minimum thickness of 300 micron (Permissible thickness in each coat shall be within 80 to 120 micron). Colour of paint shade shall be RAL-7038, however any change in colour shall be finalized during drawing approval stage.

17.0 Lock Open/ Lock Close/Normally Close Requirement : **N. A.**

Notes:

1. This Valve Data Sheet shall be read in conjunction with MECON's Technical Specification No. MEC/TS/05/21/002,Rev 1 ,Ed. 1
2. Inspection and Testing shall be as per attached QAP, this Data Sheet, MECON's T.S., API 6D and other relevant standards.
3. Stops shall be provided for positive alignment of ball with ports and ensure proper installation of handle.
4. Short pattern valves (as per API 6D or otherwise) are not permitted. Only long pattern valves are to be supplied.
5. Charpy V-notch & Hardness test for body, body adaptor, end flanges, ball, body seat rings, stem & studs / nuts shall be conducted as per Cl. 3.4 & 3.6 of TS respectively or as per relevant material code.
6. Compressed asbestos fibre (CAF) shall not be used for body sealing / gasket materials.
7. Material for body shall have a guaranteed minimum yield strength of 35000 psi. In case the same cannot be guaranteed, valves shall be provided with a 500 mm pup piece (integrally welded to the valve on each side) with strength equivalent to that of the connecting pipe. - N.A.
8. For welding end, the out of roundness (i. e. difference between maximum and minimum ID at pipe end) shall not be more than 0.5% of pipe OD.
9. Valves shall be inspected and approved by Purchaser before despatch.
10. Support foot & lifting lugs shall be provided as per Cl. 4.16 of the TS for Ball Valves

REV. NO.	DATE	ZONE	DESCRIPTIONS	BY	APPRD
			REVISIONS		

REFERENCES DRG. NO.

SECTION PROCESS & PIPING

	NAME	DATE	CHKD	DATE
DSGN				
DRWN				

CLIENT :

SUPPLIER :

SUB SUPPLIER :

PROJECT :

MECON LIMITED

APPROVED

DATA SHEET FOR BALL VALVES (NB ≥ 2")

SCALE :

DATA SHEET NO.: MEC/U999/05/28/M/001/DS/BV/76

REV 0

DATA SHEET FOR PLUG VALVE

1.0 Valve Manufacturer :

2.0 Valve Size (NB), mm (inch) : **2"** **ANSI Rating : 300#** Design Standard : **API 6D**

3.0 MECON's Technical Specification No. : **MEC/TS/05/62/003, Rev-2**

4.0 Connecting Pipeline Design Pressure, Bar : **49** **Design Temperature, °C : -29°C to 65°C**

5.0 **Connecting Pipe Specification**
5.1 Material : **ASTM A106 Gr.B**
5.2 Diameter (OD), mm (inch) : **60.3**
5.3 Thickness, mm : **5.54**

6.0 **Valve Construction Design**
6.1. Pattern : Short [√] Regular [ ] Venturi [ ]
6.2. End Connections : **Flanged both ends** [ ] Flanged as per ASME B 16.5
: **Butt Weld both ends** [√] Butt Weld as per ASME B16.25
: **Flanged one end, butt weld other end** [ ]
6.3. Flanges (wherever applicable) : a) RF [ ] FF [ ] RTJ [ ] NA [√]
b) Serrated [ ] Smooth (125 to 200 microinches AARH) [ ] NA [√]

7.0 **Valve Material Specification**

	Part	Material	Material Offered (Equivalent or Superior)
7.1	Body	**ASTM A216 Gr. WCB/ A234 Gr. WPB**	
7.2	Plug	**(ASTM A216 Gr. WCB/ A234 Gr. WPB) + 75 microns ENP Coating**	
7.3	Cover	**ASTM A216 Gr. WCB/ A234 Gr. WPB**	
7.4	Stem (No Casting)	**(AISI 4140 + 75 microns ENP Coating)/ AISI 410**	
7.5	Stem Seal	**PTFE/Graphite**	
7.6	Stud Bolts/ Nuts	**ASTM A193 Gr. B7/ A194 Gr. 2H**	

8.0 Corrosion Allowance : **1.5 mm** Service : **Natural Gas**

9.0 Location : Above Ground [√] Buried [ ]

10.0 Stem Extension Requirement : Yes [ ] No [√]

11.0 Gear Operator Requirement : Yes [ ] No [√]

12.0 Gas Powered Actuator Requirement : Yes [ ] No [√]

13.0 Fire Resistant Design Requirement : **Type-Test as per Standard API 6FA/ BS EN: 10497**

14.0 **Valve Testing Requirement**

			Test Pressure (min.), kg/cm2(g)	Minimum Duration, minutes
14.1	Hydrostatic Test	Body	**76**	**2**
		Seat	**57**	**2**
14.2	Air Test		**5.6 - 7**	**2**

15.0 **Valve Painting Specification**
15.1 Surface preparation by Short Blasting as per grade SA 2 1/2, Swedish Standard SIS-055 909.
15.2 For above ground installation-Three coats of corrosion resistant paint shall be applied with minimum thickness of 300 micron (Permissible thickness in each coat shall be within 80 to 120 micron). Colour of paint shade shall be RAL-7038, however any change in colour shall be finalized during drawing approval stage.

16.0 Lock Open/ Lock Close Requirement : **As indicated in P&ID / Schedule of Rates (SOR).**

Notes:
1. This Valve Data Sheet shall be read in conjunction with MECON's Technical Specification No. MEC/TS/05/62/003, Rev2
2. Inspection and Testing shall be as per attached QAP, this Data Sheet, MECON's T.S., API 6D and other relevant standards.
3. Stops shall be provided for positive alignment of plug with ports and ensure proper installation of handle.
4. Charpy V- notch & Hardness test for body, plug, cover, stem & studs/nuts shall be conducted as per Clause No.: 3.4 & 3.5 of TS respectively.
5. Minimum all pressure containing and controlling parts of the valve shall be provided with EN 10204-3.2 certificate.
6. Attached generic QAP shall be submitted for approval after making necessary changes considering 3.2 certification aspect.
7. Material for body shall have a guaranteed minimum yield strength of 35000 psi. In case the same cannot be guaranteed, valves shall be provided with a 500 mm pup piece (integrally welded to the valve on each side) with strength equivalent to that of the connecting pipe. **- N.A.**
8. For welding end, the out of roundness (i. e. difference between maximum and minimum ID at pipe end) shall not be more than 0.5% of pipe OD.
9. Bidder shall clearly write valves material (equivalent or superior) offered by them against each part/material of valve in the space provided for. Wherever bidder agrees with valves material as mentioned above in MECON's data sheet, bidder shall clearly indicate **"AGREED".**

REV. NO.	DATE	ZONE	DESCRIPTIONS	BY	APPRD
			REVISIONS		

SECTION OIL & GAS					CLIENT :	REFERENCES	DRG. NO.
	NAME	DATE	CHKD	DATE	SUPPLIER :		
DSGN					SUB SUPPLIER :		**MECON LIMITED**
DRWN					**PROJECT :**		

APPROVED	**DATA SHEET FOR RF PLUG VALVES (NB ≥ 2")**	SCALE :	REV
		DATA SHEET NO.:MEC/U999/05/28/M/001/DS/PV/76	0

DATA SHEET FOR GLOBE VALVES

1. Valve Manufacturer :

2. Size **: 2"** **Rating : ANSI 300#** Design Standard **:BS EN ISO 17292:2004**

3. Purchaser's Specification : **Refer Technical notes for Gate & Globe Valves**

4. Design Pressure : **49 kg/cm^2(g)** Design Temperature **: -29°C to + 65°C**

5. Corrosion Allowance : **1.5mm** Service **: Natural Gas**

6. End Connections :
   - Flanged both ends as per ASME B 16.5 [√]
   - Butt Weld both ends as A-16.25 [ ]
   - Flanged one end butt weld other end [ ]
   - Socket weld both ends as per ASME B16.11 [ ]

7. Flanges (where applicable) : a) RF [√] FF [ ] RTJ [ ]

   b) Serrated [ ] Smooth (125 to 200 AARH) [√]

8. Connecting Pipe Specification :

9. Valve Material Specification :

	Part	Material	Material Offered (Equivalent or Superior)
9.1	Body	**ASTM A 216 Gr.WCB**	
9.2	Bonnet (Bolted)	**ASTM A 216 Gr.WCB**	
9.3	Stem (Rising)	**13% Cr. Steel (No Casting)**	
9.4	Disc(Loose Plug/Ball Type)	**(ASTM A 216 Gr. WCB + 13% Cr Steel Facing) /**	
		13% Cr Steel (Stellited)	
9.5	Body Seat Ring	**ASTM A 216 Gr. WCB+13% Cr Steel Facing (Stellited)**	
9.6	Stem Packing (Renewable	**Corrosion inhibited die formed flexible**	
	with valve open on stream)	**graphite with braided anti extrusion rings**	
9.7	Hand Wheel (Rising)	**Malleable Iron/ Cast Steel/ Fab. Steel**	
9.8	Bonnet Bolts	**A 193 Gr. B7**	
9.9	Bonnet Nuts	**A194 Gr. 2H**	
9.10	Bonnet Gasket	**Spiral Wound SS 316 + Grafoil**	

10. Hydrostatic Test Pressure
    a) Body : **76 kg/cm^2(g)**
    b) Seat : **57 kg/cm^2(g)**

11. PnuematicTest Pressure with Air : **5.6 - 7 kg/cm2 (g).**

12. Painting Specifications:
    i) Surface preparation by Short Blasting as per grade SA 2 1/2, Swedish Standard SIS-055 909.
    ii) For above ground installation-Three coats of corrosion resistant paint shall be applied with minimum thickness of 300 micron (Permissible thickness in each coat shall be within 80 to 120 micron).

Notes:

1. Valve specification sheet shall be read in conjunction with technical notes for Gate and Globe valves.
2. Valve shall be designed for intrinsically fire safe.
3. Testing shall be as per BS EN 12266-1,approved QAP,this specification and other relevant standards.
4. Bidder shall clearly write all/ any deviation against each part/ material of valve in the space provided for . Wherever bidder agrees with MECON's data sheet, bidder shall clearly indicate "agreed".
5. Charpy 'V' notch test on each heat of base material shall be conducted for all pressure containing parts such as body, end flange, welding ends as well as the bolting material as per ASTM A370. The test shall be conducted at 0°C. The minimum average absorbed energy per set of three specimen shall be 27 J with an individual minimum per specimen of 22 J.
6. Hardness test shall be carried out on each heat of base material for all pressure containing parts of the valve. A full thickness cross section shall be taken for this purpose and the maximum hardness shall not exceed 248 HV10 based on minimum four measurements representing the entire thickness.
7. Stem packing shall be renewable with valve open on stream .
8. Painting procedure of the valves shall be as per Manufacturer's Standard.
9. Material Test Certificates and Hydro Test Reports shall be furnished prior to dispatch.

REV. NO.	DATE	ZONE	DESCRIPTIONS	BY	APPRD

SECTION Oil & Gas				CLIENT :	REFERENCES / DRG. NO.
	PREPARED	CHECKED	APPROVED		
NAME				PROJECT:	MECON LIMITED
DATE					
SIGN				DATA SHEET FOR GLOBE VALVES (NB ≥ 2")	DATA SHEET NO.: MEC/U999/05/28/M/001/DS/BV/02 — REV 0

DATA SHEET FOR SOCKET WELDED BALL VALVE

1.0 Valve Manufacturer :

2.0 Valve Size (NB), mm (inch) **:1½" , ¾ "** NB ANSI Rating : **800#** Design Standard **: BS EN ISO 17292**

3.0 MECON's Technical Specification No. **:**

4.0 Connecting Pipeline Design Pressure,Bar : **49** Design Temperature, °C : **-29°C to +65°C** Service : **Natural Gas**

5.0 **Connecting Pipe Specification**

5.1	Diameter (OD), mm	40	20
5.2	Material	A106 Gr. B	A106 Gr. B
5.3	Wall Thickness, mm	5.08	5.56

6.0 **Valve Construction Design**

6.1. Configuration : Reduced Bore [ ] Full Bore [√]

6.2. End Connections **:Socket Welded as per ASME B16.11**
100mm Extension Pups in ASTM A106 Gr.B (Sch. XS for 1.5" & Sch. 160 for 3/4") at both ends

6.3.1 Flanges (wherever applicable) : RF [ ] FF [ ] RTJ [ ] NA [√]

6.3.2 Flange Face Finish Serrated [ ] Smooth (125 to 200 microinches AARH) [ ] NA [√]

6.4 Ball Mounting **: Floating Ball Type**

7.0 **Valve Material Specification**

	Part	Specified Material	Material Offered (Equivalent or superior)
7.1	Body	**ASTM A105**	
7.2	Ball	**13% Cr Steel**	
7.3	Body Seat	**RPTFE/ DELRIN**	
7.4	Gland	**13% Cr Steel**	
7.5	Stem (No Casting)	**13% Cr Steel**	
7.6	Body Seal	**Grafoil**	
7.7	Stem Seal	**Grafoil**	
7.8	Body Studs/Nuts	**ASTM A193 Gr. B7/ A194 Gr. 2H**	

8.0 Corrosion Allowance : **1.5 mm** Service : **Natural Gas**

9.0 Location : Above Ground [√] Buried [ ]

10.0 Stem Extension Requirement : Yes [ ] No [√]

11.0 Gear Operator Requirement : Yes [ ] No [√]

12.0 Gas Operated Actuator Requirement : Yes [ ] No [√]

13.0 Fire Resistant Design Requirement : **Type-Test as per API 607/6FA**

14.0 **Valve Testing Requirement**

		Test Pressure (min.) (kg/cm²(g))	Minimum Duration (minutes)
14.1	Hydrostatic Test Body	210	As per BS EN ISO 17292
	Seat	155	As per BS EN ISO 17292
14.2	Air Test	5.6 - 7	As per BS EN ISO 17292

15.0 Anti-Static Testing Requirement :**As per BS EN ISO 17292**

16.0 **Valve Painting Specification**

16.1 Surface preparation by Short Blasting as per grade SA 2 1/2, Swedish Standard SIS-055 909.

16.2 For above ground installation-Three coats of corrosion resistant paint shall be applied with minimum thickness of 300 micron (Permissible thickness in each coat shall be within 80 to 120 micron). Colour of paint shade shall be RAL-7038, however any change in colour shall be finalized during Normally Open Requirement : Not Applicable

17.0

Notes:

1. Charpy V-notch test for body, ball, body seat, gland, stem & studs/nuts shall be conducted as per A370. The test shall be conducted at 0°C. The minimum average absorbed energy per set of three specimen shall be 27 J with an individual minimum per specimen of 22 J.
2. Material test certificates and hydrostatic test reports shall be furnished prior to despatch.
3. Detailed dimensional drawings showing cross-section with part numbers and materials shall be submitted for Purchaser's approval prior to manufacture of the valves.
4. All tests shall be as per BS EN 12266.
5. Valves shall have ball position indicator.
6. Stops shall be provided for positive alignment of ball with ports and ensure proper installation of handle.
7. Each valve shall be provided with a wrench.
8. Valves shall be inspected and approved by Purchaser before dispatch.
9. Gland packing assembly shall permit repair of gland packing under full line pressure.
10. Inspection and Testing shall be as per attached QAP, this datasheet, BS EN 12266, other relevant standards&clause no. 6.0&7.0 of TS No.: MEC/TS/05/21/002,Rev. 1,Ed. 1.

REV. NO.	DATE	ZONE	DESCRIPTIONS	BY	APPRD

SECTION	NAME	DATE	CHKD	DATE
DSGN				
DRWN				

CLIENT :
SUPPLIER :
SUB SUPPLIER :
PROJECT :

REFERENCES DRG. NO.

MECON LIMITED

APPROVED By

TECHNICAL SPECIFICATION & DATA SHEET FOR BALL VALVES (NB < 2")

SCALE :
DATA SHEET NO.: MEC/U999/05/28/M/001/DS/BV/23

REV 0

ASSORTED PIPPES

AMENDMENT TO
TECHNICAL SPECIFICATION
FOR
ASSORTED PIPPES

(SPECIFICATION NO. MEC/TS/05/62/59A, R-0)

QUALITY ASSURANCE PLAN
For
ASSORTED PIPPES

INSPECTION AND TEST PLAN

FOR

ASSORTED PIPES

1	26.02.2020	ISSUED FOR IMPLEMENTATION	Sachin Kumar	Sachin Singhal	A K Gupta
Rev. No.	Date	Purpose	Prepared	Checked by	Approved by

SL.NO.	STAGE	COMPONENT	CHARACTERISTICS	METHOD OF CHECK	QUANTUM OF CHECK	REFERENCE DOCUMENTS	ACCEPTANCE NORMS	RECORD	SCOPE OF INSPECTION		
									Manufacturer	TPIA	Client/Mecon
1.0	Raw material inspection	Plate/Sheet/ Strip	(i)Chemical Composition: CE	Testing	One sample per heat	Relevant Code & Technical Specification	As per code & Technical Specification	Mill test Certificate/ report	H	R	R
			(ii)Mechanical properties YS,UTS,EL	Testing	One sample per heat	Relevant Code & Technical Specification	As per code & Technical Specification	Inspection report	H	R	R
2.0	Manufacturing, welding (HFW & SAW)	Pipe	Welding Speed, Current, Voltage, Frequency, Offset, Height of Flash & Trim	Record of Parameter	100% by Vendor	Relevant Code & Technical Specification	Approved WPS	Internal report	P	R	R
3.0	**Product Testing**										
3.1	Destructive Testing	Pipe	Mechanical Properties	Tensile, Flattening, Reverse Bend, Hardness, Impact & Macro	One sample per heat	Relevant Code & Technical Specification	As per code & Technical Specification	Lab Report	W	W	W
			Chemical Properties	Chemical Composition							
3.2	Non Destructive Testing	Pipe	Surface & Internal Inspection	UT/RT or as per code & specification	100% by Vendor	Relevant Code & Technical Specification	As per code & Technical Specification	Inspection Report/ Internal Record	W	R	R

SL.NO.	STAGE	COMPONENT	CHARACTERISTICS	METHOD OF CHECK	QUANTUM OF CHECK	REFERENCE DOCUMENTS	ACCEPTANCE NORMS	RECORD	SCOPE OF INSPECTION		
									Manufacturer	TPIA	Client/Mecon
3.3	Heat Treatment (As Applicable)	Pipe	Stress Relieving, Normalizing, Tempering, Solution Annealing etc.	Temperature Recording	Each Pipe	Relevant Code & Technical Specification	Relevant Code & Technical Specification	HT Chart	P	R	R
4.0	Hydrostatic test	Pipe	No leak	Visual	Each Pipe	Relevant Code & Technical Specification	As per code & Technical Specification	Inspection Report, Hydraulic Graph	W	W	RW
5.0	Final inspection	Pipe	Straightness, Outer Diameter (Pipe Body, Pipe Ends), Out of Roundness, Thickness, Length, Surface Lamination, Root Face, Bevel Angle	Visual, dimensional	100% by vendor	Relevant Code & Technical Specification	As per code & Technical Specification	Inspection Report	W	W	RW
6.0	Galvanizing (If Applicable)	Pipe	Integrity of Galvanized Coating	---	Each Pipe	Relevant Code & Technical Specification	As per code & Technical Specification	Inspection Report	P	R	R
	Legends/Notes:										
.	W-witness, R-Review, RW- Minimum 10% witness and 100% Review ,										

QUALITY ASSURANCE PLAN
FOR
INSULATING JOINTS

0	03.01.2015	ISSUED FOR IMPLEMENTATION	AM	HK	AK
Rev. No.	Date	Purpose	Prepared by	Checked by	Approved by

Format No. : 05/21/IJ/001

APPLICABLE CODES AND SPECIFICATIONS : MEC/TS/05/21/009, R-0 WITH AMENDMENTS									SCOPE OF INSPECTION			
S. NO.	STAGE	COMPONENT	CHARACTERISTICS	METHOD OF CHECK	QUANTUM OF CHECK	REFERENCE DOCUMENTS	ACCEPTANCE NORMS	RECORD	Sub Vendor	Vendor	VENDOR APPOINTED TPI	MECON / IOCL
1.	Raw Material Identification	Forged Ring, Pipe	1. Visual 2. Dimensions 3. Finish 4. Bore 5. Marking 6. Mechanical properties (Tensile, Impact, Hardness and others) 7. Chemical properties (CE Value) 8. Supply Condition (Heat treatment). 9. Deoxidation practice / refining (killed / calcium treated / vacuum degassed etc.) (as per applicable spec.)	Visual Dimensions Verification of markings with TC, TC verification	100%	Material Specification	Technical Specification as per TS and Data Sheet	Mill, Manufact-urer's TC	-	W	R	R
2.	Raw Material Identification	Seal Gasket, Filling Material Insulating Ring	Electrical Resistance & Thickness	Die Electric Test	100%	Material Specification / Data Sheet	Technical Specification as per TS and Data Sheet	Inspection Report	-	W	W	R
3.	Manufacturing Welding	-	Approved WPS, PQR, WQT	Welding Parameters	100%	ASME Section-IX	ASME Section IX	WPS, PQR, WPS	-	W	R	R

APPLICABLE CODES AND SPECIFICATIONS : MEC/TS/05/21/009, R-0 WITH AMENDMENTS									SCOPE OF INSPECTION			
S. NO.	STAGE	COMPONENT	CHARACTERISTICS	METHOD OF CHECK	QUANTUM OF CHECK	REFERENCE DOCUMENTS	ACCEPTANCE NORMS	RECORD	Sub Vendor	Vendor	VENDOR APPOINTED TPI	MECON / IOCL
4.	Manufacturing Welding	-	New WPS, PQR, WQT	Welding Parameters	100%	ASME Section-IX	ASME Section IX	WPS, PQR, WPS	-	W	W	R
5.	Manufacturing Welding	Forged Ring to pipe (Butt & Fillet)	Welding	Welding Parameters	At random	Approved WPS	Approved WPS	Inspection Report	-	W	W	R
6.	Non Destructive Testing	Pipe to Ring (Other than butt welds) Forgings (surface), Finished weld ends for lamination, Fillet welds greater 7 mm and above.	Surface & Internal Imperfections	UT, MPI or other as specified	PO, Material Specification	PO, Material Specification	PO, Technical Specification	Inspection Report, Graphical record	-	W	W	R
7.	Non Destructive Testing	Pipe to Ring (Butt Welds & Repairs)	Surface & Internal Imperfections	Radiography	PO, Material Specification	API-1104 ASME SEC V	API-1104 PO, Technical Specification	Inspection Report Film	-	W	R (100% of films)	R
8.	Hydro testing Air Leak Test, Vacuum Test	Insulating Joint Assembly	Leak Check	Visual	100%	Material Specification	Technical Specification and relevant standards mentioned therein.	Inspection Report, Hydro graph	-	W	W	W/ R
9.	Final Inspection	Pipe	Surface condition, Bevel angle, Root	Visual Dimensional	100% by vendor, At	Material Specification	Technical Specification	Inspection Report	-	W	W	W/ R

APPLICABLE CODES AND SPECIFICATIONS : MEC/TS/05/21/009, R-0 WITH AMENDMENTS									SCOPE OF INSPECTION			
S. NO.	STAGE	COMPONENT	CHARACTERISTICS	METHOD OF CHECK	QUANTUM OF CHECK	REFERENCE DOCUMENTS	ACCEPTANCE NORMS	RECORD	Sub Vendor	Vendor	VENDOR APPOINTED TPI	MECON / IOCL
			face, Outer dia., Thickness Length, End finish, Coating, Marking, Colour coding.		random by MECON / TPI		and relevant standards mentioned therein.					
10.	Final Inspection	Assembly	Insulating Resistance	Die Electric Test	All Joints	Technical Specification and relevant standards mentioned therein.	No Break down of flash over	Inspection Report	-	W	W	W/ R
11.	Final Inspection	Assembly	Holiday Detection	Holiday detecting machine	100% quantity		No Holiday	Inspection Report		W	W	W/ R

NOTE: 1.**All items shall be provided with EN 10204-3.2 certificates**

2.One week advance intimation to be given to the Owner/consultant by the vendor for activity marked at Sl. No. 8 & 10
3. In addition to inspection and testing requirement mentioned above, contractor shall witness all the testing under cl. 8 to 11.

LEGENDS: H – Hold (Offer for Witness & obtain clearance), W – Witness, R – Review, A – Approval, I – Information, X – Submit, PO – Purchase Order, PR – Purchase Requisition, SR – Stress Relieving, MPI – Magnetic Particle Inspection, DI-Dye Penetrant Test , UT – Ultrasonic examination, TS – Technical Specification, WPS – Welding Procedure Specification, PQR – Procedure Qualification Record, WQT – Welder Qualification Test.

All the NDT / Leak Testing / Heat Treatment / Special manufacturing procedures have to be specially approved or only previously approved procedures have to be used. In case of conflict between purchase specification, contract documents and ITP more stringent conditions shall be applicable. The document describes generally the requirements pertaining to all

For CONTRACTOR/ SUB-CONTRACTOR

(Stamp & Signature)

DATA SHEET FOR INSULATING JOINTS

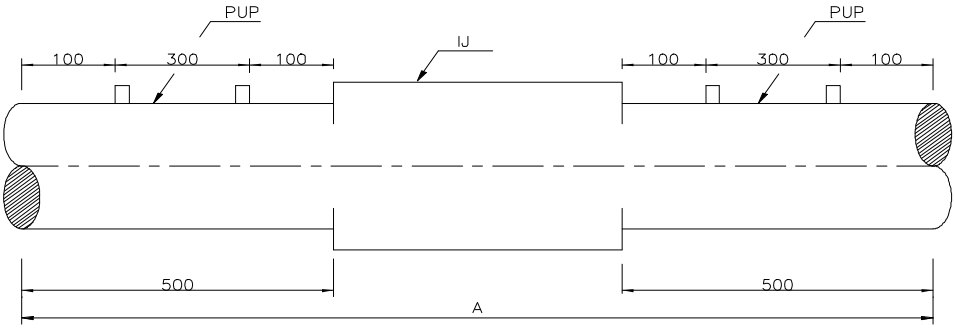

A = OVERALL LENGTH OF IJ TO BE CONFIRMED BY MANUFACTURER.

1. INSULATING JOINTS MFR. :
2. PURCHASER'S SPECIFICATION NO. : MEC/TS/05/21/009
3. RATING : 300#
4. DESIGN PRESSURE :49 Kg/cm2(g)
5. DESIGN TEMPERATURE : -29°C to 65°C
6. SERVICE : Natural gas
7. CORROSION ALLOWANCE : 1.5 MM
8. SIZE NB MM (INCHES) : 300 (12")
9. END CONNECTION : BUTT-WELD AT BOTH ENDS
10. DESIGN CODE : ASME SECTION-VIII DIV-I
11. DESIGN FACTOR : 0.5
12. HYDROSTATIC TEST PRESSURE : 74 Kg/cm^2(g)
13. CHARPY TEST(BODY, WELDING ENDS) : REQUIRED AS PER TECHNICAL SPEC. & ASTM A370
14. HARDNESS TEST : REQUIRED AS PER TECHNICAL SPEC. & ASTM A370
15. MATERIALS SPECIFICATION (EQUIVALENT OR SUPERIOR)
    A) BODY : ASTM A-694, F-52
    B) PUPS : API 5L GR. X-52 PSL-2, 7.1 mm THK.(MIN.)
    C) INSULATING MATERIAL : ASTM D709 G10/ G11
16. CONNECTING PIPE SPECIFICATION

SIZE, NB, MM (INCHES)	300 (12")
WALL THICKNESS, MM(MIN.)	7.9
GRADE	API 5L Gr. X-52

17. SPECIAL REQUIREMENTS : INSULATION JOINT SHALL BE SUITABLE FOR ABOVE GROUND INSTALLATION
18. QUANTITY : As per SOR
19. TAG NOS. : As per P&ID

Note: Manufacturer shall ensure that the wall thickness (W.T.) of all parts of insulating joint shall be adequate t o sustain design pressure and selected W.T. shall be suitable for welding with W.T. of connected pipeline.

REV. NO.	DATE	ZONE	DESCRIPTIONS	BY	APPRD
			REVISIONS		

SECTION OIL & GAS					CLIENT :	REFERENCES / DRG. NO.
	NAME	DATE	CHKD	DATE		MECON LIMITED
DSGN	SACHIN		HARSH	18.12.2019	PROJECT:	
DRWN						
APPROVED			A.GUPTA, DGM		DATA SHEET FOR INSULATING JOINTS	SCALE : / Data Sheet No.MEC/U999/05/21/M/00/DS-009-01 / REV 0

DATA SHEET FOR INSULATING JOINTS

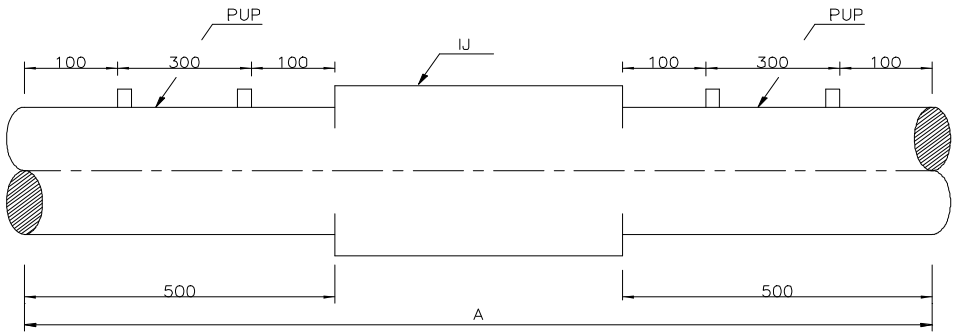

A = OVERALL LENGTH OF IJ TO BE CONFIRMED BY MANUFACTURER.

1. INSULATING JOINTS MFR. :
2. PURCHASER'S SPECIFICATION NO. : MEC/TS/05/21/009
3. RATING : 300#
4. DESIGN PRESSURE : 49 Kg/cm2(g)
5. DESIGN TEMPERATURE : -29°C to 65°C
6. SERVICE : Natural Gas
7. CORROSION ALLOWANCE : 1.5 MM
8. SIZE NB MM (INCHES) : 200 (8")
9. END CONNECTION : BUTT-WELD AT BOTH ENDS
10. DESIGN CODE : ASME SECTION-VIII DIV-I
11. DESIGN FACTOR : 0.5
12. HYDROSTATIC TEST PRESSURE : 74 Kg/cm2(g)
13. CHARPY TEST(BODY, WELDING ENDS) : REQUIRED AS PER TECHNICAL SPEC. & ASTM A370
14. HARDNESS TEST : REQUIRED AS PER TECHNICAL SPEC. & ASTM A370
15. MATERIALS SPECIFICATION (EQUIVALENT OR SUPERIOR)
    A) BODY : ASTM A-694, F-52
    B) PUPS : API 5L GR. X-52 PSL-2, 6.4 mm THK.(MIN.)
    C) INSULATING MATERIAL : ASTM D709 G10/ G11
16. CONNECTING PIPE SPECIFICATION

SIZE, NB, MM (INCHES)	200 (8")
WALL THICKNESS, MM(MIN.)	6.4
GRADE	API 5L Gr. X-52

17. SPECIAL REQUIREMENTS : INSULATION JOINT SHALL BE SUITABLE FOR ABOVE GROUND INSTALLATION
18. QUANTITY : As per SOR
19. TAG NOS. : As per P&ID

Note: Manufacturer shall ensure that the wall thickness (W.T.) of all parts of insulating joint shall be adequate t o sustain design pressure and selected W.T. shall be suitable for welding with W.T. of connected pipeline.

REV. NO.	DATE	ZONE	DESCRIPTIONS	BY	APPRD
			REVISIONS		

REFERENCES | DRG. NO.

SECTION OIL & GAS | **CLIENT :**

	NAME	DATE	CHKD	DATE
DSGN	SACHIN		HARSH	18.12.2019
DRWN				

PROJECT:

MECON LIMITED

APPROVED A K GUPTA, DGM

DATA SHEET FOR INSULATING JOINTS

SCALE :

Data Sheet No.MEC/U999/05/21/M/00/DS-009-02

REV 0

DATA SHEET FOR INSULATING JOINTS

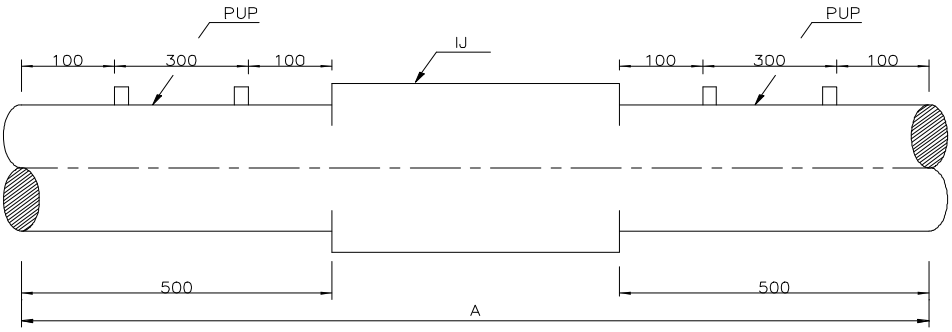

A = OVERALL LENGTH OF IJ TO BE CONFIRMED BY MANUFACTURER.

1. INSULATING JOINTS MFR. :
2. PURCHASER'S SPECIFICATION NO. : MEC/TS/05/21/009
3. RATING : 300#
4. DESIGN PRESSURE : 49 Kg/cm2(g)
5. DESIGN TEMPERATURE : -29°C to 65°C
6. SERVICE : Natural Gas
7. CORROSION ALLOWANCE : 1.5 MM
8. SIZE NB MM (INCHES) : 150 (6")
9. END CONNECTION : BUTT-WELD AT BOTH ENDS
10. DESIGN CODE : ASME SECTION-VIII DIV-I
11. DESIGN FACTOR : 0.5
12. HYDROSTATIC TEST PRESSURE : 74 Kg/cm2(g)
13. CHARPY TEST(BODY, WELDING ENDS) : REQUIRED AS PER TECHNICAL SPEC. & ASTM A370
14. HARDNESS TEST : REQUIRED AS PER TECHNICAL SPEC. & ASTM A370
15. MATERIALS SPECIFICATION (EQUIVALENT OR SUPERIOR)
    A) BODY : ASTM A 694 Gr. F-52
    B) PUPS : API 5L Gr. X-52, PSL-2, 6.4 mm THK.(MIN.)
    C) INSULATING MATERIAL : ASTM D709 G10/ G11
16. CONNECTING PIPE SPECIFICATION

SIZE, NB, MM (INCHES)	150 (6")
WALL THICKNESS, MM(MIN.)	6.4
GRADE	API 5L Gr. X-52

17. SPECIAL REQUIREMENTS : INSULATION JOINT SHALL BE SUITABLE FOR ABOVE GROUND INSTALLATION
18. QUANTITY : As per SOR
19. TAG NOS. : As per P&ID

Note: Manufacturer shall ensure that the wall thickness (W.T.) of all parts of insulating joint shall be adequate t o sustain design pressure and selected W.T. shall be suitable for welding with W.T. of connected pipeline.

REV. NO.	DATE	ZONE	DESCRIPTIONS	BY	APPRD
			REVISIONS		

SECTION OIL & GAS				CLIENT :	REFERENCES	DRG. NO.
	NAME	DATE	CHKD	DATE		MECON LIMITED
DSGN	SACHIN		HARSH	18.12.2019	PROJECT :	
DRWN						
APPROVED			K GUPTA, DGM		DATA SHEET FOR INSULATING JOINTS	SCALE : / Data Sheet No.MEC/U999/05/21/M/00/DS-009-03 / REV 0

DATA SHEET FOR INSULATING JOINTS

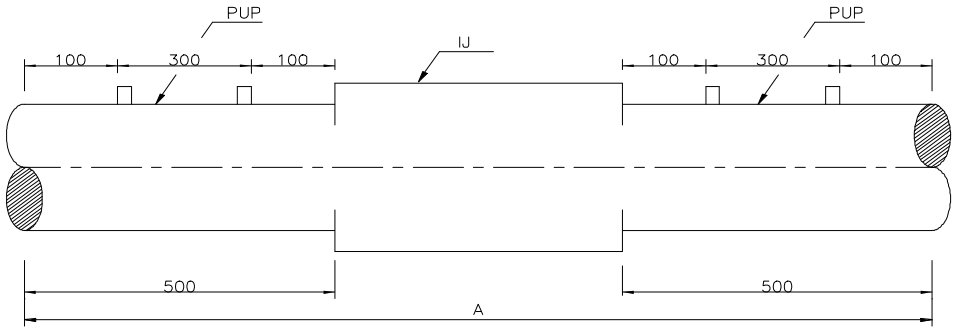

A = OVERALL LENGTH OF IJ TO BE CONFIRMED BY MANUFACTURER.

1. INSULATING JOINTS MFR. :
2. PURCHASER'S SPECIFICATION NO. : MEC/TS/05/21/009
3. RATING : 300#
4. DESIGN PRESSURE : 49 Kg/cm2(g)
5. DESIGN TEMPERATURE : -29°C to 65°C
6. SERVICE : Natural Gas
7. CORROSION ALLOWANCE : 1.5 MM
8. SIZE NB MM (INCHES) : 100 (4")
9. END CONNECTION : BUTT-WELD AT BOTH ENDS
10. DESIGN CODE : ASME SECTION-VIII DIV-I
11. DESIGN FACTOR : 0.5
12. HYDROSTATIC TEST PRESSURE : 74 Kg/cm2(g)
13. CHARPY TEST(BODY, WELDING ENDS) : REQUIRED AS PER TECHNICAL SPEC. & ASTM A370
14. HARDNESS TEST : REQUIRED AS PER TECHNICAL SPEC. & ASTM A370
15. MATERIALS SPECIFICATION (EQUIVALENT OR SUPERIOR)
    A) BODY : ASTM 694 F-52
    B) PUPS : API 5L GR X52 PSL-2, 6.4mm THK.(MIN.)
    C) INSULATING MATERIAL : ASTM D709 G10/ G11
16. CONNECTING PIPE SPECIFICATION

SIZE, NB, MM (INCHES)	114.3 (4")
WALL THICKNESS, MM(MIN.)	6.4
GRADE	API 5L X-52 PSL-2

17. SPECIAL REQUIREMENTS : INSULATION JOINT SHALL BE SUITABLE FOR ABOVE GROUND INSTALLATION
18. QUANTITY : As per SOR
19. TAG NOS. : As per P&ID

Note: Manufacturer shall ensure that the wall thickness (W.T.) of all parts of insulating joint shall be adequate t o sustain design pressure and selected W.T. shall be suitable for welding with W.T. of connected pipeline.

REV. NO.	DATE	ZONE	DESCRIPTIONS	BY	APPRD
			REVISIONS		

SECTION OIL & GAS					CLIENT :	REFERENCES / DRG. NO.
	NAME	DATE	CHKD	DATE		MECON LIMITED
DSGN	SACHIN		HARSH	18.12.2019	PROJECT:	
DRWN						
APPROVED			AK Gupta, DGM		DATA SHEET FOR INSULATING JOINTS	SCALE : / Data Sheet No.MEC/U999/05/21/M/00/DS-009-04 / REV 1

DATA SHEET FOR INSULATING JOINTS

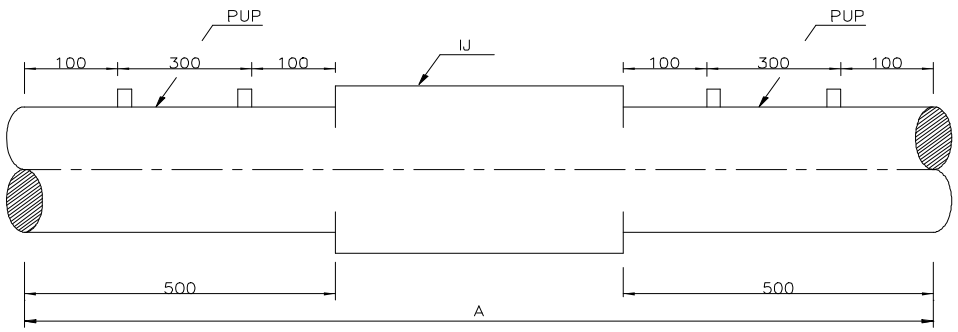

A = OVERALL LENGTH OF IJ TO BE CONFIRMED BY MANUFACTURER.

1. INSULATING JOINTS MFR. :
2. PURCHASER'S SPECIFICATION NO. : MEC/TS/05/21/009
3. RATING : 300#
4. DESIGN PRESSURE : 49 Kg/cm2(g)
5. DESIGN TEMPERATURE : -29°C to 65°C
6. SERVICE : NATURAL GAS
7. CORROSION ALLOWANCE : 1.5 MM
8. SIZE NB MM (INCHES) : 50 (2")
9. END CONNECTION : BUTT-WELD AT BOTH ENDS
10. DESIGN CODE : ASME SECTION-VIII DIV-I
11. DESIGN FACTOR : 0.5
12. HYDROSTATIC TEST PRESSURE : 74 Kg/cm2(g)
13. CHARPY TEST(BODY, WELDING ENDS) : REQUIRED AS PER TECHNICAL SPEC. & ASTM A370
14. HARDNESS TEST : REQUIRED AS PER TECHNICAL SPEC. & ASTM A370
15. MATERIALS SPECIFICATION (EQUIVALENT OR SUPERIOR)
    A) BODY : ASTM A 105
    B) PUPS : ASTM A 106 Gr. B (Charpy), sch. STD
    C) INSULATING MATERIAL : ASTM D709 G10/ G11
16. CONNECTING PIPE SPECIFICATION

SIZE, NB, MM (INCHES)	60.3 (2")
WALL THICKNESS,	Sch. STD
GRADE	ASTM A 106 Gr. B (Charpy)

17. SPECIAL REQUIREMENTS : INSULATION JOINT SHALL BE SUITABLE FOR ABOVE GROUND INSTALLATION
18. QUANTITY : As per SOR
19. TAG NOS. : As per P&ID

Note: Manufacturer shall ensure that the wall thickness (W.T.) of all parts of insulating joint shall be adequate t o sustain design pressure and selected W.T. shall be suitable for welding with W.T. of connected pipeline.

REV. NO.	DATE	ZONE	DESCRIPTIONS	BY	APPRD
			REVISIONS		

SECTION OIL & GAS					CLIENT :	REFERENCES / DRG. NO.
	NAME	DATE	CHKD	DATE		MECON LIMITED
DSGN	SACHIN		HARSH	18.12.2019	PROJECT:	
DRWN						
APPROVED		A.K. Gupta, DGM			DATA SHEET FOR INSULATING JOINTS	SCALE : / Data Sheet No.MEC/U999/05/21/M/00/DS-009-05 / REV 0

PARTICULAR JOB SPECIFICATION FOR STATION PIPING

1.0 Piping Works

Supply of assorted pipe, fasteners, gaskets, fittings, flanges, utility piping & piping supports and other supply wherever specified as per SOR.

- Taking delivery of free issue materials (If any) from TNGCL's designated stores within the Agartala GA and its transportation to site.

- All fabrication, Hook-up, erection, testing and commissioning of piping above ground at all elevations and below ground at all depths including provision shall be kept for installation of temporary flanged end header for Pig Launching, all valves, insulating joints, barred tee and other fittings and associated piping works as per drawings and specifications.

- All mechanical works of under ground and above ground, complete piping including fabrication, welding, all non destructive testing of welds repairs/ pretesting, hydrostatic testing, cleaning/ flushing, functional testing, cutting of mainline and bevelling (if required), excavation in all types of soil for installation of piping and pipe supports.

- Installation of all on-line instruments, pressure gauge, valves, insulating joints, appurtenances, etc.

- Obtaining all necessary approvals and work permits from concerned local authorities having jurisdiction including hot work permit as applicable for performing the work.

- Carrying out welding including cutting, edge preparation (inclusive of grinding the edges on fittings, flange, etc. to match with the matching edges of different thickness wherever required, bending, pre-heating wherever required, NDT including radiography by X-ray / Gamma-ray and other non-destructive tests specified. NDT requirements for process and other piping shall be in accordance with relevant specifications enclosed with the tender document.

- Preparation of plot plan cum piping GAD based on schematic drawings provided progesively during the execution for online station. Preparation of isometric drawings and final Bill of Material based on piping detail GA drawings prepared by contractor & duly approved by Owner / Consultant.

- Cleaning and servicing of all free issue materials including equipment,

valves to make it suitable for installation.

- Completion of all mechanical works as detailed in SOR.

- Pre-commissioning, providing commissioning assistance, nitrogen purging of the complete underground pipe network including supply of all materials such as required type and quantity of pigs, consumables and manpower that are required during pre-commissioning and commissioning activities including all coordination with and assistance to other agencies/ contractors during commissioning operations and all associated works.

2.0 SCOPE OF SUPPLY

MATERIAL TO BE SUPPLIED BY CONTRACTOR

The procurement and supply, in sequence and at appropriate time and place, including inspection and expediting, of all materials and consumables required for completion of the work as defined in this bid document shall be entirely the CONTRACTOR's responsibility and the item rates quoted for the execution of the WORK shall be inclusive of supply of all these materials. All materials supplied by the CONTRACTOR shall be strictly in accordance with the requirements of relevant COMPANY material specifications enclosed with the Contract document. All equipments, materials, components etc. shall be new and specifically purchased for this job from Company approved vendors, duly inspected by third party inspection agency, only manufacturer certificate shall not be adequate.

Contractor shall appoint anyone of the following TPIA for inspection purpose, wherever required as per tender document. Contractor has to propose minimum 4 nos. of below listed agencies to be approved by TNGCL / MECON:

a) Lloyd Register of Industrial Services

b) Technische Ulierwachungs Verein (TUV)

c) Det Norske Veritas (DNV)

d) AB-Vincotte

e) Bureau Veritas

f) SGS

g) American Bureau Services

h) Velosi Certification Services

i) Certification Engineers International Limited (CEIL)

Apart from inspection by TPIA, inspection may also be performed by MECON / TNGCL's personnel.

As a minimum, the materials to be supplied by CONTRACTOR shall include but not be limited to the following.

Piping and Equipment

a) Studs, nuts, washers, U bolts, clamps, clips, pipe supports, gaskets for piping works.

b) Shims, wedges and packing plates (machined wherever required).

c) Galvanized steel piping of all sizes for instrument air/ service air.
d) Portable Fire Extinguisher System.

e) Painting material

All other items/ materials as may be required for completion of contractual scope of work and in SOR.

General

All consumables for welding such as oxygen, acetylene, inert gases and all types of electrodes suitable for pipes of grades as specified in the specification, low hydrogen electrodes, filler wire, solder wire, brazing rods, flux etc. for welding / cutting and soldering purpose.

Equipment like hydrostatic pump etc., water and corrosion inhibitor for water used for hydrostatic testing including all pipes, fittings and equipment, metallic blinds, temporary gaskets as required for filling, pressurising and dewatering in connection with hydrostatic testing completion.

All pigs for cleaning, filling, dewatering and swabbing of pipeline.

All pipes, fittings and equipment metallic blinds temporary gaskets as required for filling, pressuring and dewatering in connection with hydrostatic testing completion.

All consumables for welding of structural steel.

Materials and equipment required for all types of tests such as radiography,

magnetic particle and dye penetrate examination.

All safety tools/tackles, devices / apparatus / equipment etc. including ladders and scaffoldings etc. complete as required.

Supply of nitrogen and other consumables, tools and tackles required for venting, predrying, purging and filling of station piping.

Any other material not specifically listed herein, but required for the execution of the work.

The item rates quoted for the execution of the work shall be inclusive of supply of all materials mentioned above unless specifically covered otherwise under schedule of rates. The quantities indicated in schedule of rates under Contractor's scope of supply are approximate. Contractor shall carryout MTO of all materials required based on IFC general arrangement drawings, P & IDs and firm up the actual requirement of materials. All escalation/ extra materials procured by Contractor for contingencies shall be Contractor's property and no payments shall be made for such materials. Payment shall be made for actual materials installed by the Contractor as a part of permanent installation.

In case, any item is covered in scope of work but is not present in Schedule of Rates (SOR), it will be assumed that bidder has included cost implication of those items in their total price.

List of materials to be supplied and quantities indicated in SOR is tentative.

These quantities can vary during execution to any extent and the same unit rate shall be applicable for payment. Final quantities will be based on the drawing issued to the contractor for construction. Quantities covered in SOR are for as erected quantities. Bidder will procure additional materials as required to cover cutting, scraps, wastages and damages during erection, testing and commissioning. For these extra quantities no additional payment will be made.

3.0 RESOURCES FACILITIES

Construction Water and Power Supply

No water and power will be provided by the owner. It should be the responsibilities of the contractor to arrange water and power at his own cost.

Land for Residential Accommodation

Owner shall not provide any land for residential accommodation of contractor's staff and labour.

4.0 Documentation

"As Built" Drawings

Notwithstanding the provisions contained in standard specifications, upon completion of WORK, the CONTRACTOR shall complete all of the related drawings to the "AS BUILT" stage and provide the OWNER, the following: -

a) Soft copy of all the as built drawings prepared in AutoCAD in three sets of re-writable compact Disc.

b) All as-built drawings as mentioned in specification for documentation enclosed elsewhere in the tender.

Completion Document

The following documents shall be submitted in hard binder by the CONTRACTOR in THREE sets, as a part of completion documents:

a) Welding Procedure Qualification Report.
b) Welder Qualification Report.
c) Radiographic Procedure Qualification.
d) Radiographic Report alongwith radiographs (Radiographs only with the original).
e) Batch Test Certificate from manufacturers for electrodes.
f) Pretesting and final Hydrostatic and other Test results and reports.
g) All other requirements as specified in the respective specifications.
h) Test results and reports.
i) Pre-commissioning/commissioning checklist.
j) Completion Certificate issued by Owner's Site Engineer.
k) No claim certificate by the Contractor.
l) Consumption statements of steel and cement certified by Owner's Site Engineer.
m) Completion certificate for embedded and covered up works wherever applicable.
n) Recovery statement, if any.
o) Statement for reconciliation of all the payments and recoveries made in the progress bills.
p) Copies of deviation statement and order of extension of time, if granted.

5.0 Additional Clauses

Contractor to note that the minimum requirements of inspection and testing of the bought-out items shall be governed by attached QAP with the tender document.

However, contractor shall submit their QAP in line with the requirement specified in attached QAP for Owner's/ PMC's approval.

6.0 Make of material/Bought out items

Appendix-I, II & III of approved vendors for various major items are enclosed with this tender specification. The bidder shall consider such names only as indicated in the aforesaid lists and clearly indicate in the bid the name(s) as selected against these items. For any other item not covered in the list enclosed with this tender document, prior approval shall be obtained by the contractor for its make/ supplier's name.

7.0 Inspection of supply items

All inspections and tests shall be made as required by the specifications forming part of this contract. Contractor shall advise Owner/ Consultant in writing at least 10 days in advance of the date of final inspection/tests. Manufactures inspection or testing certificates for equipment and materials supplied, may be considered for acceptance at the discretion of Owner/ Consultant. All costs towards testing etc. shall be borne by the contractor within their quoted rates. All inspection of various items shall be carried out based on Quality Assurance Plan, which will be submitted by the Contractor and duly approved by Owner/ Consultant.

8.0 Documents to be submitted/produced along with RA Bills

i) Computerized R.A. Bill/ Manual Bill, with IT No./ ST N o./ Labour License No. Printed thereon.

ii) ESI/ EPF clearance certificates for the last month alongwith R.A. Bills.

iii) Insurance Policy as per relevant clauses of Contract Agreement.

iv) Attendance Register and Salary Records.

v) Photocopy of the measurement book to be attached with R.A. Bills.

vi) Any other document required for the purpose of processing the bills.

vii) Registration Certificate with Sales tax authorities of state concerned.

9.0 Special note pertaining to Schedule of Rates (SOR).

i) All SOR item shall be quoted by the bidder in the price part of the bid, otherwise bid will be rejected.

ii) The quantities given above against individual items are indicative and shall not be considered to be binding. The quantities may be increased, decreased or deleted at site at the time of actual execution and as per discretion of Owner / Engineer-in-charge. The unit rate shall be operated to work out the final payment due to Contractor.

iii) The payment will be made as per actual certified measurement at site.

iv) The scope as mentioned in the SOR is of indicative nature only and shall include all activities as detailed in the relevant clauses of the respective Particular Job Specifications, Technical Specifications, Data Sheets & drawings, etc.

v) The quantities mentioned in SOR for contractor supplied items shall be finalized and procured by contractor only after due approval of Engineer-in-charge. Contractor supplied any surplus item during reconciliation shall not be accepted / taken by the Owner.

10.0 LIST OF PREFERRED MAKE MANUFACTURER / SUPPLIERS FOR MAJOR BOUGHT-OUT ITEMS (APPENDIX-I, II & III TO PARTICULAR JOB SPECIFICATION FOR MAINLINE, MECHANICAL & ASSOCIATED WORKS)

Appendix-I

To Particular Job Specification of Work

LIST OF SUPPLIERS OF MAJOR BOUGHT-OUT ITEMS
(Mechanical & Fire Fighting Equipment)

A) **Mainline & Mechanical**

i) **PIPE CARBON STEEL TO INDIAN STANDARDS**

1. A.S.T. Pipes Pvt.Ltd.(AST Group)
2. Advance Steel Tube Ltd.
3. APL Apollo Tubes Ltd. (Er. Bihar Tubes Ltd.)
4. Asian Mills Pvt.Ltd.
5. Asrani Tubes Limited
6. Dadu Pipes (P) Ltd.
7. Essar Steel Limited (Er Hazira Pipes Mill)
8. Gaurang Products Pvt Ltd. (Ast Group)
9. Good Luck Steeltubes Ltd.
10. Hi-Tech Pipes Limited
11. Indus Tube Limited
12. Jindal Industries Ltd
13. Jindal Pipes Ltd.
14. Jindal Saw Ltd (Kosiworks)
15. Jotindra Steel & Tube Ltd.
16. Lalit Pipes and Pipes Ltd.
17. Maharashtra Seamless Ltd.
18. Man Industries (India) Ltd.–Pithampur
19. Man Industries (India) Ltd.Anjar
20. Mukattanks & Vessels Ltd.
21. Nezone Tubes Limited
22. North Eastern Tubes Limited
23. Pratibha Industries Limited
24. Pratibha Pipes & Structural Ltd.
25. PSL Ltd (Chennai)
26. PSL Ltd (V1,V2& Nc)
27. Rama Steel Tubes Ltd.
28. Ratnamani Metals and Tubes Ltd.
29. Ravindra Tubes Limited
30. Samshipipe Industries Limited
31. Suryaroshni Ltd.
32. Swastik Pipes Ltd.
33. Utkarsh Tubes & Pipes Ltd. (For MLY BMW)
34. Welspun Corp.Limited (Dahej)
35. Zenith Birla (India) Limited

ii) PIPE & TUBULARS TO A.P.I. STANDARDS

1. Arcelor Mittal Tubular Products Roman SA, Romania
2. BHEL (Trichy), India
3. Dalminespa (Enquiry to Tenaris), UAE
4. EEW Korea Co.Ltd. (Germany), Korea
5. EEW Korea Co.Ltd. (Korea), Korea
6. Eisenbau Kramer Gmbh, Germany
7. Hyundai Rbco.Ltd. South Korea
8. ILVA Lamiere E Tubi SRL (Enqt Oil Vaspa, Italy)
9. Ino Xtech. Spa, Italy
10. Ismt Ltd.Ahmednagar, India
11. Ismt Ltd. Baramati, India
12. Jindal pipes ltd., India
13. Jindal Saw Ltd. (Kosi Works), India
14. Jindal Saw Ltd. (Nashik Works), India
15. Lalit Pipes and Pipes Ltd. India
16. Maharashtra Seamless Ltd., India
17. Man Industries(I) Ltd. (Pithampur), India
18. Mukat Tanks &Vessels Ltd., India
19. Pratibha Industries Limited, India
20. Ratnamani Metals and Tubes Ltd., India
21. Sider Cas.A.I.C (Enquiry to Ten Aris), UAE
22. Sumitomo Metal Ind.Ltd., India
23. Surya Roshni Ltd., India
24. Swastik Pipes Ltd, India
25. Tata Steel Uk Limited (Former Lyc702)
26. Tubos De Acero De Mexico SA (ENQ.TENARIS), UAE
27. Tubos Reunidos SA Spain
28. Umran Steel Pipe Inc (Turkey), Turkey
29. Valcovny Trub Chomutov, Czech Republic
30. Vallourec and Mannesmann Tubes, France
31. Welspun Corp Limited (Dahej), India

iii) PIPE / TUBE CS (SEAMLESS) TO ASTM STDS

1. Arcelor Mittal Tubular Products Roman SA, Romania
2. BHEL (Trichy), India
3. Changshu Seamless Steel Tubeco.Ltd., China
4. Dalmine SPA (Enquiry to Tenaris, UAE)
5. Heavy Metals & Tubes Limited (Mehsana), India
6. Ismt Ltd. Ahmednagar, India
7. Ismt Ltd. Baramati India
8. JFE Steel Corporation, UAE
9. Jindal Saw Ltd (Nashik Works) India

10. KLT Automotive and Tubular Products Ltd., India
11. Mahalaxmi Seamless Limited, India
12. Maharashtra Seamless Ltd, India
13. Products Tubulares S.A.U, Spain
14. Ratnadeep Metal Tubes Ltd., India
15. Staineest Tubes Pvt Ltd., India
16. Sumitomo Metalind.Ltd., India
17. Tubos Reunidos SA Spain
18. Valcovny Trub Chomutov, Czech Republic
19. Vallourec And Mannesmann Tubes, France
20. Yangzhou Chengde Steel Pipe Co. Ltd, Dubai (UAE)

iv) PIPE CARBON STEEL (WELDED) TO ASTM STDS

1. EEW Korea Co.Ltd. (Germany), Korea
2. EEW korea Co.Ltd. (Korea), Korea
3. Eisenbau Kramer Gmbh, Germany
4. Hyundai RB Co.Ltd., South Korea
5. Ino Xtech. SPA, Italy
6. Jindal Saw Ltd (Kosi Works), India
7. Lalit Pipes and Pipes Ltd., India
8. Man Industeries(I) Ltd. (Pithampur), India
9. Man Industries (India) Ltd.Anjar, India
10. Mukat Tanks & Vessels Ltd., India
11. Ratnamani Metals and Tubes Ltd., India
12. Sumitomo Metal India Ltd., India
13. Tata Steel Uk Limited

v) Valve

a) **Globe Valves**

1) M/s Weir BDKValves (A unit of Weir India Pvt.Ltd.)
2) M/s Datre Corpn (Calcutta)
3) M/s KSB Pumps Ltd., Coimbatore, India
4) M/s L&T Audco
5) M/s Neco Schuber & Salzer Ltd. (New Delhi)
6) M/s NitonValve India Pvt. Ltd., India
7) M/s Ornate Valves (Mumbai)
8) M/s Panchavati Valves & Flages (P)Ltd., India
9) AV Valves Ltd., India
10) BHEL (Trichy), India
11) Econo Valves Pvt Ltd, India
12) Fouress Engg (I) Ltd (Aurangabad), India
13) Leader Valves Ltd, India
14) Oswal Industries Ltd, India
15) Petrochemical Engineering Enterprises, India (Fouress Group)
16) Sakhi EngineersPvt Ltd., India
17) Shalimar Valves Pvt Ltd., India

18) Steel Strong Valves India Pvt Ltd, India
19) Petro Valves Pvt.Limited, Ahmedabad
20) Fluid LineValves Co.(P)Ltd., India
21) MICON Engineers (Hubli) (P) Ltd., India

b) **Check Valves**

1. M/s AdvanceValves Pvt.Ltd., Noida
2. M/s Aksons& Mechanical Enterprises, Mumbai
3. M/s Larsen&Toubro Limited (M/sAudco IndiaLimited, Chennai)
4. M/s AVValvesLtd., India
5. M/s Weir BDKValves (Aunitof Weir IndiaPvt.Ltd.)
6. M/s BHEL, Trichy
7. M/s Datre CoroportionLimited, Calcutta
8. M/s Leader Valves Ltd., Jalandhar
9. M/s Neco schubert&Salzer Ltd., New Delhi
10. M/s NitonValves Industries (P) Ltd., Mumbai
11. M/s Precision Engg. Co., Mumbai
12. Econo Valves PvtLtd, India
13. Fouress Engg (I) Ltd (Aurangabad)
14. KSB PumpsLtd (Coimbattore), India
15. NSSLLtd. (Neco Schubert&SalzerLtd)
16. Oswal Industries Ltd, India
17. Panchvati Valves& Flanges Pvt Ltd, India
18. Petrochemical Engineering Enterprises, India (Fouress Group)
19. Sakhi Engineers Pvt Ltd
20. Shalimar Valves Pvt Ltd
21. Steel Strong Valves IndiaPvt Ltd, India
22) Fluid Line Valves Co.(P)Ltd., India
22. MICON Engineers (Hubli)(P) Ltd., India

c) **Plug Valves**

1. M/s Breda Energia SestoIndustria Spa, Italy
2. M/s Fisher Sanmar Ltd., Chennai
3. M/s Larsen&Toubro Ltd., (Audco) New Delhi
4. M/s Nordstrom Valves, USA
5. M/s Serck Audco Valves, UK
6. M/s Sumitomo Corporation India Pvt.Ltd., New Delhi
7. M/s Z Corporation, Korea
8. M/s Hawa Valves (India)Pvt.Ltd., Mumbai
9. M/s Steel Strong Valves India Pvt.Ltd., NaviMumbai
10. M/s EconoValves Pvt.Ltd., India (WSSLLtd. Group Co.)
11. M/s Flow-Serve PTE (Mfr. SERCK), India
12. M/s Galli Cassina SPA, Italy

d) **Ball Valves**

1. M/s Hawa Valves (India)Pvt.Ltd, NaviMumbai
2. M/s Larsen&Toubro (Audco), India
3. M/s Oswal Industries Ltd., India
4. M/s Virgo Engineers Ltd.,Delhi
5. M/s Boteli Valve GroupCo. Ltd., China
6. M/s Cameron Italy S.R.L., Italy
7. M/s Dafram S.P.A., Italy
8. M/s Fangyuan Valve Group Co.Ltd., China
9. M/s FranzSchuck GmbH, Germany
10. Kita Mura Valve Manufacturing Co.Ltd., India
11. Petrol Valve S.R. Italy
12. Piplviesse S.P.A. Italy
13. Tormene Gas TechnologyS.P.A. Valvetalia Group, Italy
14. ValbeotS.R.L. Italy
15. KMC Corporation, SouthKorea
16. MSA a.s. Czeek Republic
17. OMS Aleri, Italy
18. PCC Valvess.r.l. Italy
19. Perar S.P.A. (Engineering. To TRP SRL), Italy
20. Italy S.R.L., Italy
21. MIR Valves, Malaysia

vi) **<u>Flow Tee</u>**

1) M/s Coprosider SPA, Italy
2) M/s GEAEnergy System India Limited, Chennai
3) M/s Multitex Filteration
4) M/s Pipeline Engineering, UK
5) M/s Scomark Engg. Limited (U.K.)
6) M/s Skeltonhall Limited, Engaland (U.K.)
7) M/s Technospecial SPA, Italy
8) M/s TectubiSPA, Italy
9) M/s RMAGermany

vii) **<u>Split Tee</u>**

1) M/s Ipsco, Canda
2) M/s TD Willamsons, USA

viii) **<u>Flanges</u>**

1. M/s Aditya ForgeLtd., Vadodara
2. M/s Amforge Industries Ltd., Mumbai
3. M/s CD Engineering Co., Ghaziabad

4. M/s EchjayForgingsPvt.Ltd. (Bombay), Mumbai
5. M/s EchjayIndustriesLtd., Rajkot
6. M/s Forge&ForgePvt. Ltd., Rajkot
7. M/s Golden Iron&SteelWorks, New Delhi
8. M/s JK Forgings, New Delhi
9. M/s Metal Forgings Pvt.Ltd., Mumbai
10. M/s Perfect Marketings Pvt.Ltd., New Delhi
11. M/s SkyForge, Faridabad
12. M/s S&G, Faridabad
13. Chaudhry Hammer Works Ltd, India
14. JAV Forgings (P)Ltd, India
15. Kunj Forgings PvtLtd, India
16. MS Fittings Mgf. Co.Pvt.Ltd.
17. R.N. Gupta& Co. Ltd, India
18. R.P. Engineering Pvt Ltd, India
19. Sanghvi Forgings &Engineering Ltd
20. Shri GaneshForgingsLtd., India
21. Uma Shankar Khandelwal &Co., India
22. SawanEngineers, Baroda
23. Stewarts &Lloyds of India Ltd., Kolkata
24. Engineering Services Enterprises
25. Abasi Engineersing Works, India
26. Anandmayee Forgings Pvt Ltd, India
27. CD Industries., India
28. Fivebros Forgings Vot Ltd., India
29. Good Luck Engineering Co., India
30. Korea Flange, SouthKorea
31. Lal MetalForgeLtd, India
32. Melesi Officine
33. Amlrojie Melesi &C. srl. Italy
34. Nicola Galperti & Figlio S.P. AIndia
35. Paramount Forge, India
36. Pradeep Metal Limited, India
37. Punjab Steel Works(the), India
38. R.D. Forge, India
39. Shah Industrial &Comml. Corporation, India
40. Ulma Forja S. Coop.
41. Vivial Forge Pvt.Ltd., Vadodara

ix) **<u>Fittings</u>**

1. M/s Commercial Supplying Agency, Mumbai
2. M/s Dee Development Engineers Ltd.
3. M/s Eby Industries, Mumbai
4. M/s Flash Forge Pvt.Ltd., Vishakhapatnam
5. M/s Gujarat Infra Pipes Pvt.Ltd., Vadodara

6. M/s M.S. Fittings Mfg.Co. Pvt.Ltd., Kolkata
7. M/s Stewarts & Lloydsof India Ltd., Kolkata
8. M/s Teekay Tubes Pvt. Ltd., Mumbai
9. M/s Pipe Fit, Baroda
10. M/s Sky Forge, Faridabad
11. M/s S&G, Faridabad
12. M/s Sawan Engineers, Baroda
13. Eby Fasteners, India
14. R.N. Gupta & Co. Ltd, India
15. ExtenE ngg PvtLtd
16. Sivananda Pipe & Fittings Ltd
17. Chero Piping SPA, Italy
18. CSA Fittings, India
19. EBY Fasteners, India
20. FittnoxSRL, Italy
21. Keonsae High Pressure Co. Ltd., SouthKorea
22. Munro &Miller Fittings Ltd., U.K.
23. TK Corporation, South Korea
24. TubeTurn (India) PvtLtd., India
25. Topaz Piping Industries, India
26. Techno forge SPA, Italy
27. P.K. Tubes & FittingsPvt. Ltd., India
28. Vivial Forge Pvt. Ltd., Vadodara

x) <u>Gaskets</u>

1. IGP Engineers (P)Ltd., Madras
2. Madras Industrial Products, Madras
3. Dikson & Company, Bombay
4. Banco Products (P) Ltd., Vadodara
5. Goodrich GasketsPvtLtd
6. Starflex Sealing IndiaPvtLtd, India
7. Teekay MetaFlex Pvt Ltd
8. UNIKLINGER Ltd
9. HEM Engg. Corp.
10. Unique Industrial Packing Pvt.Ltd.

xi) <u>Fasteners</u>

1. Nireka Engg.Co.(P)Ltd., Calcutta
2. Precision Taps & Dies, Bombay
3. AEP Company, Vithal Udyoug Nagar
4. FixFitFasteners, Calcutta
5. Precision Engg. Industries, Baroda
6. Echjay Forgings Pvt. Ltd., Bombay
7. Capital Industries, Bombay

8. Boltmaster India Pvt Ltd, India
9. Deepak Fasteners Limited, India
10. Fasteners &Allied Products Pvt Ltd, India
11. Hardwin Fasteners PvtLtd, India
12. J.J. Industries, India
13. Multi Fasteners Pvt Ltd, India
14. Nexo Industries, India
15. Pacific Forging & Fasteners Pvt Ltd, India
16. Pioneer Nuts & Bolts Pvt Ltd, India
17. Precision Auto Engineers, India
18. President Engineering Works, India
19. Sandeep Engineering Works, India
20. Syndicate Engineering Industries, India
21. BEA SRL, Italy
22. Korea Parts & Fasteners (KPF), South Korea
23. Kundan Industries Ltd., India
24. Mega Engineering Pvt.Ltd., India
25. OME Metallurgica ERBESES. R.L, Italy
26. Pankaj International, India
27. Udehra Fasters Ltd., India

xii) **<u>Fire Fighting Equipments</u>**

a) **Fire Extinguishers**

1. Avon Services (Production&Agencies) Pvt.Ltd., Bombay
2. Kooverji Devshi & Co., Bombay
3. Zenith Fire Services, Bombay
4. Safex Fire Services, Bombay
5. Reliable (FireProtection) India Ltd., Bombay
6. Brij Basi Hi
7. tech Udyog
8. Bharat Engg Works, India
9. Gunnebo India Ltd
10. Nitin Fire Protection Industries Ltd, India
11. Supremex Equipments, India
12. Vimal Fire Controls PvtLtd., India

1. Raychem RPG Limited

xiii) **<u>Warning mat</u>**

1. Sparco Multiplast Pvt. Ltd., Ahmedabad
2. M/s Raychem RPG Limited
3. Singhal Industries Private Limited

xiv) <u>High Build Epoxy Coating</u>

1. Berry Plastics –Powercrete
2. Specialty Polymer Canada
3. Denso Protal, Canada

xv) <u>NDT AGENCY</u>

1. NDT Services, Ahmedabad
2. GEECY Industrial Services Pvt.Ltd., Mumbai
3. Corrosion Control Services, Mumbai
4. Perfect Metal Testing &Inspection Agency, Calcutta
5. Inter Ocean Shipping Co., New Delhi
6. RTD, Mumbai
7. Sievert, Mumbai
8. X-Tech, Vizag
9. Industrial X-Ray and Allied Radiographers (I) Pvt. Ltd.
10. Inspection Technology, Mumbai

xxiv) INSULATING JOINTS (IJ)

i) M/s IGP Engineers, chennai
ii) M/s Basco (UK)
iii) M/s Bramsthal Postfach, Germany
iv) M/s Nuovagiungas, Italy
v) M/s Phoceene DeMetallurgic, France
vi) M/s Piping Technology, France (Erstwhile M/s Lall Storm)
vii) M/s Prochind SPA, Italy
viii) M/s Zunt Italiana
ix) M/s Meteor Pvt.Ltd.
x) M/s Alpha Engineering, italy
xi) M/s Igawara Industrial Services and Trading Pvt.Ltd.
xii) M/s Sanghai Fiorentini Equipment
xiii) M/s RMA Maschinen
xiv) M/s FranzSchuk
xv) M/s Advance Electronics Systems, Vadodara
xvi) M/s VeekayVikram, Vadodara

B) **Architectural**

List of Preffered Manufacturers of Architectural /Building Products

	Item/NameofManufacturer	Place	BrandName
1.0	**FloorFinishing**		
1.1	**TerrazzoTiles**		
A	Nitco	Delhi	NITCO
B	HindustanTiles	Delhi	HindustanTiles
1.2	**CeramicTiles**		
A	Regency Ceramics Ltd.	Hyderabad	Regency
B	Kajaria Ceramics Ltd.	Delhi	Kajaria
C	Orient Ceramics & Industies Ltd.	Delhi	Orient
D	Bell Ceramics	Vadodara	BELL
E	SPLLtd.	Delhi	Somany
F	H&R Johnson(I) Ltd.	Mumbai	Johnson
G	Spartek Ceramics	Chennai	Spartek
H	Murudeshwar CeramicsLtd.	Hubli	Naveen
1.3	**VitrifiedTiles**		
A	Regency Ceramics Ltd.	Hyderabad	Regency
B	Orient Ceramics & Industies Ltd.	Delhi	Orient
C	SPLLtd.	Delhi	Somany
D	H&R Johnson(I) Ltd.	Mumbai	Johnson
E	Murudeshwar Ceramics Ltd.	Chennai	Spartek
F	Kajaria Ceramics Ltd.	Hubli	
1.4	**Acid Resistant Tiles**		
A	Regency CeramicsLtd.	Hyderabad	Regency
B	H&R Johnson(I) Ltd.	Mumbai	Endura
1.5	**PVC Tiles/Rolls**		
A	All Manufacturers Listed (Having Operativeand Valid License) by HISAIBIS WebSite http://www.bis.org.in		
B	Armstrong World Insutries	Mumbai	Excelln
C	Bhor Industries	Delhi	MARBLFX
D	Shyam Vinyl	Chennai	Shyam Vinyles
1.6	**PVC Tiles/Rools/Anti-Static)**		
A	Armstrong World Insutries	Mumbai	SolidLG1
B	Premier Poly Film Ltd.	Delhi	ANSTAT
1.7	**EpoxyCoating**		
A	Fosroc Chemical(I) Pvt.Ltd.	Bangalore	NitofloorSL2000/1000
B	Sika	Kolkata	SikaFloor
C	Buildtech Products(I) Pvt.Ltd.	Delhi	Buildpoxy-SL
D	Anupam Industries	Kolkata	-
E	STP	Delhi	

1.8	**FloorHardener**		
A	Cico Technologies Limited	Delhi	CICO
B	Samcock Chemicals(P)Ltd.	Ahmedabad	SamhardSTD
C	PCCCSS Procfssorand Traders	Kolkata	Doronite
1.9	**Designer Paver Tiles/Interlocking Tiles ISI Marked/Grass-Jointed Tiles(1stQualityOnly)**		
A	Pavit,Ultra,Hindustan,Eurocon,Vyara,NationalTiles,Gem,Unistone,Konkrete		
B	Rammica Indusries	Delhi	Rammica
C	The Bombay Burmah Trading Corpn.	Delhi	Formica
2.0	**WoodWork**		
2.1	**BlockBoard/FlushDoor**		
A	All Manufacturers Listed(Having Operativeand Valid License) by HISAIBIS WebSite http://www.bis.org.in		
2.1	**Plywood**		
A	All Manufacturers Listed (Having Operativeand Valid License) by HISAIBIS WebSite http://www.bis.org.in		
2.2	**Laminates**		
A	All Manufacturers Listed (Having Operativeand Valid License) by HISAIBIS WebSite http://www.bis.org.in		
2.3	**MDFBoards**		
A	Nuchem Limited	Faridabad	NULAM/NVWUD
B	MangalamTimber Products Limited	Delhi	Nuwud
C	Western Bio Systems Ltd.	PUNF	Ecoboard
D	Bajaj Eco-Tech Products Limited	Noida	Bajaj
2.4	**Particle Board (Plain/Veneered/Pre-Laminated)**		
A	All Manufactureres Listed by BIS Under is 3097(Having Operativeand Valid License) at BIS WebSite http://www.bis.org.in/		
2.5	**PressedSteelDoorFrames/Cup board and Window Frames (Fabricators)**		
	M/s SAIL		
	M/s TATA		
3.0	**Steel/Aluminium/Fire Rated Doors, Windows, Ventilators**		
3.1	**Pressed Steel Doors/Windows**		
A	SKS SteelInd.	Delhi	-
B	Dhiman Steel	Delhi	-
C	Supper Steel WindowsCo.	Delhi	-
D	RDG Engineering	Mumbai	-
E	Anand Industries	Delhi	-
F	Raymus Engineering	Gurgaon	-
G	M/s Loyal Safe Works Mayapur	NewDelhi	
H	M/s Multiwyn Industrial Corpn.Clacutta	Kolkata	
I	M/s Metal Window Corpn.	NewDelhi	
J	M/s Chhabra Steel Udyog	260 SadarBazar, Meerut Cantt	

K	M/s Delite Safe Works,	Rani Jhansi Road, New Delhi	
L	M/s Ishwar Industries,	175/ABomay Bazar, Meerut Cantt	
M	M/s Chandni Industries	J-142, Patelnagar1st,	
		Ghaziabad	
3.2 A	**Aluminimum/Doors/WindowsSections**		
A	Jindal Aluminium Limited	Bangalore	
B	Hindalco	Mumbai	
3.2 B	Alluminuml Door/Windows/Glazing Fabricatorand Anodized		
A	M/s Alumilite Pvt. Ltd., C.A HLCON	NewDelhi	
B	M/s Ajit India Pvt. Ltd.	Mumbai	
3.3	**Fire Proof Doors**		
A	Navair International	Delhi	Viper
B	RDG Engineering	Bombay	Radiant
3.4	**Steel Windows, Ventilators (asperIS-1038 of 1983) & frames pressed steel door/window)**		
A	M/s Multiwyn Industrial Corpn Calcutta	Kolkata	
B	M/sMetal Window Corp N/Delhi	NewDelhi	
C	M/s Govind Enterprises, Delhi	Delhi	
D	M/s Chhabra Steel Udyog 260, Sadar Bazar, Meerut Cantt, Agent Steel MFG Pvt.Ltd. Ahmedabad, Godrej.		
E	M/s Chandni Industries, J-142, Patel NagarIst, Ghaziabad	Ghaziabad	
3.5	**Rolling Shutters (ISI marked)**		
A	Swastic	Mumbai	
B	Hercules	Bangalore	
C	Shubdwar		
D	M/s Bharat Rolling Shuters Industries Agra Rama Rolling Shutter Works		
E	Gandhi Entrance Automations Private Limited		
4	**Door/WindowsFittings**		
4.1	**MorticeLockswithHandles**		
A	Godrej & Boyce	Mumbai	Godrej
B	Everite Agencies(P)Ltd.	Delhi	Everite
C	Golden Industries	Delhi	Golden
4.2	**Hydraulic Door Closer (Overhead/FloorMounted)**		
A	All Manufactureres Listed by BIS Under is 3087(Having Operativeand Valid License)		

	at BIS WebSitehttp://www.bis.org.in/		
B	Doo rking Industries	Delhi	Doorking
4.3	**Misc.DoorFittings e.g., Hingee, TowerBots, Latches, Stoppers etc.**		
A	All Manufacturers Listed by BIS under IS:3087(Having operativeand valid license) at BIS WebSitehttp://ww.bis.org.in/		
B	Everite Agencies(P)Ltd.	Delhi	Everite
C	EBCO Industries	Delhi	EBCO
D	ECIE(P)Ltd.	Mumbai	ECIE
D	Hardwyn Traders	Mumbai	Hardwyn
	Aluminimum/Doors/WindowsFittings		
	M/s Wlite Enterprises C/6ShalimarHardware133, JargMahal, Dhobitalao Mumbai400002		
	M/sMohan Metal Industries 178/2-A, BholeNath Nagar, Shahadara, Delhi110032		
	Mepro, Argent NewDelhi, Classic, NewDelhi		
	ArgentNewDelhi,		
	Golden IndustriesPvt.Ltd.	Delhi	
4.4	**Automatic GlassDoor**		
A	Ditec (Gandhi)	Mumbai	
4.5	**Aluminium Grill**		
A	AluGrill, Arihant Aluminium Corporation, Decogrille	Bangalore	Decogrille
4.6	**BuildersHardware**		
A	M/s Golden Industries Pvt.Ltd. Everite, Solo	delhi	
5.0	**Roof Treatment (Water-Proofing)**		
5.1	**P.U. Based Waterproofing (OneComponemt)**		
A	Llyod Insulations(I)Ltd.	Delhi	IsothaneEma
B	Cico TechnologiesLtd.	Delhi	Corchem2061
C	Fosroc Chemical(I)Pvt.Ltd.	Bangalore	Nitoproof
5.2	**P.U. Based Water proofing (TwoComponemt)**		
A	Shivalik Agro Poly Products Pvt.Ltd.	Delhi	Shivabond903
B	Industrial Product Manufacturing Company	Pune	EZECOAT
C	Fosroc Chemical(I) Pvtl.Ltd.	Bangalore	Brushbond
D	Sika	Kolkata	Sikalastic
E	Sip Industries Limited	Chennai	Sipguard
5.3	**Approved Membrane**		
A	LlyodInsulations(I)Ltd.	Delhi	LloyedPlastolan
B	Buildtech Products Pvt. (I)Ltd.	Delhi	BuilDwrapP
C	Cico Technologies Ltd.	Delhi	CICOShield
D	Fosroc Chemical(I)Pvt.Ltd.	Bangalore	Proofex
F	Sika	Kolkata	SikaWPShield
G	STPLtd	Kolkata	SuperThermolay
H	IWL IndiaLtd.	Chennai	Hyperplas

I	Pure Leathers Pvt.Ltd.	Delhi	Roofseai
6.0	**PaintingWorks**		
	Plastic/AcrylicEmulsionPaint	Jodhpur	
6.1	**(Internal and External, Distemper/Acrylic Distemper)**		
A	ICI Paints/ICIIndiaLtd.	Kolkata	
B	Berger Paints	Kolkata	LewisBerger
C	Asian Paints	Mumbai	AsianPaint
D	Shalimar Paints	Mumbai	ColorSpace
E	Nerolac Paints	Mumbai	
F	Acropaints/Imited	Delhi	
G	GodavariPaintsPvt.Ltd.	Mumbai	
H	NE Paint Udyog	Sivasagar (Assam)	
6.2	**SyntheticEnamelPaint(forBuildingWorks)**		
A	ICI Paints/ICIIndiaLtd.	Kolkata	
B	Berger Paints	Kolkata	
C	Asian Paints	Mumbai	
D	Shalimar Paints	Mumbai	
E	Nerolac Paints	Mumbai	
F	Godavari Paints Pvt.Ltd.	Mumbai	
G	NE Paint Udyog	Sivasagar (Assam)	
6.3	**Waterproof Cement Paint**		
A	Killick NixonLtd.	Mumbai	Snowcem
B	Godavari Paints Pvt.Ltd.	Mumbai	Superemcem
C	Acropaints/Imited	Delhi	Acrocfm
D	Snow WhiteIndustrial Corpn	Chennai	Superclm
E	Rajdoot Paints	Delhi	Xlracem78SuperCementPaint
6.4	**Decorative Textured Coating**		
A	Luxture Surface Coatings Pvt.Ltd.	Ajmer	Luxture
B	Bakelite Hylam Ltd.	Secundrabad	Heritage
C	NCLAlltekandSeccolorLtd.	Hyderabad	Alltek
D	AcropaintsLtd.	Delhi	Acrotextures
E	Unitile	Delhi	Unitile
F	SpectrumPaint	Delhi	Spectrum
6.5	**Ploshing(forWoodwork)**		
A	Asian Paints	Mumbai	AsianPaint
B	Shalimar Paints	Mumbai	Mellac
7.0	**Roofing Sheets & Accessories**		
7.1	**Precoated Profiled G.I./Galvalume/Zincalume Sheets**		
A	Llyod Insulations(I)Ltd.	Delhi	Lloydeck
B	Interarch Building Products(P)Ltd.	Noida	Tracdek
C	Multi Colour Steel(I)Pvt.Ltd.	Delhi	Multi……

D	Hardcastele & WaudMfg.Co.Ltd.	Mumbai	FeroColour
E	Japan Metal Building Systems Pvt.Ltd.	Bangalore	JMBS
F	TATA Bluescope Steel Limited	Pune	TrimdfCK
G	Era Building Systems Limited	Delhi	ERA
H	Shree Precoated Steels Limited	Mumbai	Metacolour
7.2	**C.G.I. Sheet**		
A	ISPAT IndustriesLtd.	Delhi	Everest
B	Steel Authority of India Ltd.	-	SAIL
C	TATASteel	-	TISCO
7.3	**AluminiumSheet**		
A	Jindal Aluminium Limited	Bangalore	
B	Hindalco	Mumbai	
7.4	**Fiber Glass Sheet & Panels**		
A	Simba Frp(P)Ltd.	Delhi	
8.0	**Sanitary, Plumbing Fittings&Fixtures**		
8.1	**Sanitary Fittings**		
A	All Manufacturers Listed by BIS under IS:3087(Having operative and valid license) at BIS WebSitehttp://www.bis.org.in/		
8.2	**Plumbing Fittings and Fixtures**		
A	Jupiter Aqua LinesLtd.	Mohali	Jupitor
B	Othello Faucets Pvt.Ltd.	Delhi	Mayur
C	Orien tCeramics	Delhi	Orient
D	Gem International	Faridabad	Gem
E	Parkash Brassware Industres	Delhi	Parko
F	Jaquar & CompanyLtd.	Delhi	Jaquar
G	Plasto craft Sanitary IndiaPvt.Ltd./HSW	Delhi	Kingston
8.2H	Cast Iron Pipesand Fittings Hinddustan Engineerng Products Company	Calcutta	
8.2I	**RCC Pipes**		
A	Indian Hume Pipe Company	Delhi/Allahabad/ Chandigarh/Lucknow	
B	Hindustan Pressure Pipes	Kolhapur	
C	Dhere Concrete Products	Pune	
8.2J	**GI Pipes**		
A	Indian Tube Company	Culcutta	
B	Kalinga Tubes Limited	RanchiGujarat	
C	Steel Tube		
D	ZenithTubeCo.	Kolaba	
E	Bharat Steel Tube	NewDelhi	
F	Jindal		
G	Shivmoni Steel Tubes Limited	Bangalore	
H	Sekhar IronWorks	Calcutta	

I	Jain Tubes,	Ghaziabad	
J	Khandelwal Tubes	Nagpur	
8.2 K	**G.I. Fittings**		
A	International Pipe Works	Calcutta	
B	R.M. Engineering Works	Jalandhar	
C	Bombay Metal Company	Bombay	
D	Tarapada Das&Sons	Howrah	
E	Annapurna Metal Works	Calcutta	
8.2L	**Gun Metal Valves and Copper Alloy Valve**		
A	Leader Engineering Wroks	Jalandhar	
B	Neta Engineering Works	Jalandhar	
C	Lakshmi Metal Works	Jalandhar	
D	Bombay Metal &Alloys Company	Bombay	
E	Luster Sanitary Fittings	Jalandhar	
F	Annapurna MetalWorks	Culcutta	
8.2 M	**Sluice Valves, Check Valves etc.**		
A	Shiva Durga Iron Works,	Howrah	
B	Leader Engineering Wroks	Jalandhar	
C	Kirloskar Bros Limited	Pun	
D	Indian Valve	Calcutta	
E	Geeta Iron &Brass Works	Baroda	
8.2 N	**Brass Fittings**		
A	Leader Engineering Wroks	Jalandhar	
B	L&K Mathura		
C	Luster Sanitary Fittings	Jalandhar	
D	Annapurna Metal Works	Calcutta	
E	Neta Engineering Works	Jalandhar	
F	Honey Industril Corporation	Bombay	
8.2 O	**C.P. Fittings**		
A	Ego MetalWorks	Ballabhgarh	
B	Jaquar&Company Ltd.	Delhi	
C	Soma Plumbing Fixtures Limited	Calcutta	
D	Gem Sanitary Appliances Pvt.Ltd.	Delhi	
E	Essco Sanitations	Delhi	
F	Bilmet	Bombay	
8.2 P	**Hydrants**		
A	Brady's	Bombay	
B	Firex	Bombay	
C	Upadhya Valves	Calcutta	
D	Eddy Foundry	Calcutta	

E	Minimax	Delhi	
8.2 Q	**Stone Ware (Salt-Glazed) Pipes**		
A	Hind Ceramics Limited	Orissa	
B	Ceramic Industries Limited	Sambalpur	
C	Shrikamakshi Agencies	Madras	
D	Binary Udyog Pvt.Lmited	Howrah	
E	Tirumati Moulds Limited	Nagpur	
F	Kiran Potteries	Hyderabad	
G	Perfect Sanitary Pipes	Bharatpur	
8.3	**Mirror/Glass**		
A	Atul Glass	Delhi	Atul
B	Gujarat Guardian Ltd./Modi/SaintGovin	Delhi	Modiguard
C	Triveni Glass	Kolkata	Triveni
D	Continental Float Glass	Delhi	Continental
E	Hindustan Safety Glass	Kolkata	Hindustan
9.0	**False Ceiling**		
9.1	**Aluminimum Strip/TrayType**		
A	Interarch Building Products(P)Ltd.	Noida	Trac
B	Hunter Douglas	Delhi	Luxalon
C	Mascot Oversfas	Delhi	Mctacie/ Trulon
D	Llyod Insulations(I)Ltd.	Delhi	Lloyd Lineal Celings
9.2	**GypsumBoard**		
A	Saint-Gobain Guproc India Ltd., LA,IP Board	Mumbai	Gypboard
9.3	**False Ceiling (POP/Gypsum Board)**		
A	Armstrong, Daiken, Luxalon, Llyods		
10.0	**False Flooring**		
A	United Insulation	Mumbai	
B	Llyod Insulations(I)Ltd.	Delhi	
C	Muti Floors	Delhi	
D	A.R& Brothers	Chennai	
E	Bestlock System&Concepts, Goderej	Mumbai	
11.0	**Insulation**		
11.1	**Underdeck Insulation**		
A	Bakelite HylamLtd.	Secundrabad	Phenotherm
B	Llyod Insulations(I)Ltd.	Delhi	Isolloyd
C	UPT wiga Fibre Glass Limited	Delhi	TWIGA
11.2	**OverdeckI nsulation**		
A	Llyod Insulations(I)Ltd.	Delhi	LloyadSprayFoam
B	Best Plastronics Ltd.	Delhi	BestPlastronics
12.0	**Miscellaneous Items**		
12.1	**Water Proofing Compoundin Plaster**		
A	Cico Technologies Ltd.	Delhi	CICONo.1

B	Pidilite Industries	Mumbai	PidiproofLA
C	Amit Chemicals(P)Ltd.	Delhi	CRETOADMIX
12.2	**CPRX Bituman Mastic**		
A	ShaiImar Tar Products	Delhi	ShalimarTar
13.0	**Concrete Admixtures**		
13.1	**Water Proofing Compound**		
A	Cico Technologies Ltd.	NewDelhi	CICONo.1
			CICOSuper
			CICOAcry
B	Kryton Buildmat CoPvt.Ltd.	Delhi	KIM
C	SikaIndia Pvt.Ltd.	Kolkata	PlastocretePlus
			Noleek
13.2	**Water Reducing Compounds**		
A	CICO Technologies Ltd.	Delhi	CICOPLASTSuper
B	Fairmatf Chemicals Pvt.Ltd.	Vadodara	FaircreteNFairflo
			FairfLOS
C	SikaIndia Pvt.Ltd.	Kolkata	Plastiment BVP lastiment81 Plastiment70 SikamentFFSikamentNNSi kament NN(BWS) SikamentNNSP1Skamen1 Sikarapid1 Sikaviscocrl:L20HE SikaviscocreTER550(I) SikaAER
14.0	**ConstructionChemicals**		
14.1	**Polysulphide Sealant**		
A	Cnowksfy Chemicals Pvt.Ltd.	Mumbai	Techseal
B	Cico Technologies Ltd.	Delhi	CICOSEALANIT580
C	Fosroc Chemical	Delhi	Thioflex660
D	Pidilite Industries	Mumbai	PidisealPS42P
E	Sika India Pvt.Ltd.	Kolkata	SIKAPolysulPH:D E(SikaAST:C) Construction
14.2	**Silicon Sealants**		
A	Pidilite Industries Ltd.	Mumbai	Dr. Fixit Silicon Sealant WX
15.0	**Anchor Fasteners**		
15.1	**Mechanical Anchor Fasteners**		
A	HiltiIndia Pvt.Ltd.	Delhi	
B	Fischer Fixing Systems (MICO)Ltd.	Bangalore	
15.2	**Chemical Anchor Fasteners**		

A	HiltiIndia Pvt.Ltd.	Delhi	
B	Fischer Fixing Systems (MICO)Ltd.	Bangalore	
16.0	**Electro-Forged Gratings**		
A	Great weld Steel Gratings Pvt.Ltd.	Pune	
B	Indiana Gratings Pvt.Ltd.	Mumbai	
17	**Modular Partitions/Furniture**		
A	Godrej, Blowplast, Featherlire, Duriar		
18.0	**Wall Care Putty for Base Preparation (1stQualityOnly)**		
A	Birla WallCare Putty		
B	M/sSahlima rHardware		
C	Berger	delhi	
D	Jenson&Nichoison	Gurgaon	
E	JKWhite	Udaipur	
19.0	**White Cement(1stQualityOnly)**		
A	Birla, JK		
20.0	**Sheet Glass/Structura lGlazing**		
A	Hindustan Pilkington GlassWorks	Chennai	
B	Saint Gobain	Chennai	
C	Modi Float	Delhi	
D	Triveni Float Glass	Allahabad	
F	ASI		
G	Fresca		
H	Emirates		
21.0	**Polycorbonate Sheet**		
A	GE Plastic, Everest		
22.0	**Multiiell/Multiwall Polycorbonate Panel**		
A	M/sCoxwell Domes Engineering, Delhi	Delhi	
B	M/s Lexan, M/sGalinaIndia Pvt.Ltd.	NewDelhi	
C	M/s Vijaynath Interiors&Exteriors Products	Mumbai	
23.0	**Stainless Steel Railing**		
A	Jindal		
24.0	**Punch Tape Concetina Coil**		
A	Global Technocrat, S.G. Engineers	Delhi	
25.0	**Punch Tape in Plastic Spool**		
A	Global Technocrat, S.G. Engineers	Delhi	
26.0	**Stainless Steel Railing**		
A	Jindal	NewDelhi	
27.0	**SGSW Pipes (IS-651) ISI marked**		
A	Perfect Agra, DevrajInd. Gaziabad, Buran, RK, Prince, Supreme Pipe and Fittings		
28.0	**CI(CentrifugallyCast) Pipes for Sewage Disposal ISI Marked**		
A	NICCO, SRIF, A-1Singhal CastingCoAgra, JindalSaw, Kesoram		
29.0	**PVC Rain Water/Sewage Pipes (IS-4985)**		

A	Reliance, Finolex, Supreme, Kisan, Prince		
30.0	**HDPE Water/SewagePipes (RotationalMoulded)**		
A	Sintex, Swift, Nutech, Sheetal		
31.0	**Asbestos Cement Pipes and Fittings**		
A	Ganga Asbestos Limited	U.P	
B	Hyderabad Asbestos Cement Products Limited		
C	J.K. Super Pipes Industries	Nanded	
D	Konark Cementand Asbestos Limited	Orissa	
E	Maharashtra Asbestos Lmited	Bombay	
F	Poddar Industrial Corporation	Patna	
G	Sarbamangala Mfg.Company	Calcutta	
32.0	**Wind Driyen Air Ventilators**		
A	Multi Colour		
	Anchit Ispat Pvt.Ltd.	Faridabad	
	Apurva Enterprises	Mumbai	
	SVS Wind Driven Turbo Ventilator	Ahmadnagar	
	Real Green Engineers Pvt.Ltd. Bagalores	Bangalore	
	Sun Green Ventilation System Pvt.Ltd	Mylapore	

Notes:

1. For procuring the above listed bought out item(s) from the vendor/ supplier, whose name is not appearing in the above preferred make list, bidders can supply those item(s) from such vendors/suppliers who have earlier supplied same item(s) for the intended services and the offered item(s) is in their regular manufacturing/ supply range and the same may be accepted subject to following: -

a) The Vendor/ Supplier of bought out item(s) is a Manufacturer/ Supplier of the said item(s) for intended services and the same are in their regular manufacturing/ supply range.

b) The vendor/supplier should not be in the Holiday list of Client/ MECON/ Other PSU.

c) For items to be purchased with measurement unit either in length or in weight: - Should have supplied for intended services at least 15% of SOR quantity of same size, thickness, schedule, pressure & temperature ratings, SDR, etc. or higher (as applicable) as per technical details mentioned in SOR & Tender specification and in a single Purchase order (PO) and the same should have been supplied within last seven (07) year from the date of approval request made by the contractor.

d) For items to be purchased with measurement unit in number: -

Should have supplied for intended services at least 15% of SOR quantity of same size, thickness, schedule, pressure & temperature ratings, SDR, etc. or higher (as applicable) as per technical details mentioned in SOR & Tender specification in a single Purchase order (PO) and the same should have been supplied within last seven (07) year from the date of approval request made by the contractor.

2. For procuring any other item(s) {i.e., not listed above}, bidders can supply those item(s) from such vendors/suppliers who have earlier supplied same item(s) for the intended services and the offered item(s) is in their regular manufacturing/ supply range and the same may be accepted subject to following: -

   a) The Vendor/ Supplier of bought out item(s) is a Manufacturer/ Supplier of said item(s) for intended services and the same are in their regular manufacturing/ supply range.

   b) The vendor/supplier should not be in the Holiday list of Client/ MECON/ Other PSU.

   c) For items to be purchased with measurement unit either in length or in weight: - Should have supplied for intended services at least 15% of SOR quantity of same size, thickness, schedule, pressure & temperature ratings, SDR, etc. or higher (as applicable) as per technical details mentioned in SOR & Tender specification in a single Purchase order (PO) and the same should have been supplied within last seven (07) year from the date of approval request made by the contractor.

   d) For items to be purchased with measurement unit in number: -

   Should have supplied for intended services at least One (01) number of same size, thickness, schedule, pressure & temperature ratings, SDR, etc. or higher (as applicable) as per technical details mentioned in SOR & Tender specification in a single Purchase order (PO) and the same should have been supplied within last seven (07) year from the date of approval request made by the contractor.

Remarks for Note 1 & 2:

   i. To meet the criterion mentioned above, the successful bidder/ contractor is required to submit documentary evidences such as copy of FOA/ Purchase Order (PO)/ sub-purchase order and their supply record like Inspection certificates/report, Inspection release note, Tax paid invoice, performance certificates (if available), etc. from which it can be established that vendor have executed supplied the order. These documents shall require to be submitted by them within 30 days from date of Placement of Order for approval to CLIENT / MECON.

3. The details of vendors indicated in this list are based on the information available with MECON, Contractor shall verify the capabilities of each vendor for producing the required quantity and the items are in their regular manufacturing range. MECON does not take any guarantee / responsibility on the performance of the vendor. It is the contractor's responsibility to verify the correct status of vendor and their quality control before proposing to CLIENT / MECON for approval of vendor name. It is also the responsibility of contractor to expedite the material in time.

4. For those vendors whose names are not appearing in the above listed items but registered with MECON can also be considered for the supply of the items. Contractor has to propose such vendors name along with their valid registration letter issued by MECON.

Appendix-II
To Particular Job Specification of Work

LIST OF PREFFERED SUPPLIERS OF MAJOR BOUGHT-OUT ITEMS
(Mechanical & Fire Fighting Equipment)

A) Mainline & Mechanical

i) PIPE CARBON STEEL TO INDIAN STANDARDS

1. A.S.T. Pipes Pvt. Ltd. (AST Group)
2. Advance Steel Tube Ltd.
3. APL Apollo Tubes Ltd. (Er. Bihar Tubes Ltd.)
4. Asian Mills Pvt. Ltd.
5. Asrani Tubes Limited
6. Dadu Pipes (P) Ltd.
7. Essar Steel Limited (Er Hazira Pipes Mill)
8. Gaurang Products Pvt Ltd. (Ast Group)
9. Goodluck Steel Tubes Ltd.
10. Hi-Tech Pipes Limited
11. Indus Tube Limited
12. Jindal Industries Ltd
13. Jindal Pipes Ltd.
14. Jindal Saw Ltd (Kosi Works)
15. Jotindra Steel & Tube Ltd
16. Lalit Pipes and Pipes Ltd.
17. Maharashtra Seamless Ltd.
18. Man Industries (India) Ltd. – Pithampur
19. Man Industries (India) Ltd. Anjar
20. Mukat Tanks & Vessels Ltd.
21. Nezone Tubes Limited
22. North Eastern Tubes Limited
23. Pratibha Industries Limited
24. Pratibha Pipes & Structural Ltd.
25. PSL Ltd (Chennai)
26. PSL Ltd (V1, V2 & NC)
27. Rama Steel Tubes Ltd.
28. Ratnamani Metals and Tubes Ltd.
29. Ravindra Tubes Limited
30. Samshi Pipe Industries Limited
31. Surya Roshni Ltd.
32. Swastik Pipes Ltd.
33. Utkarsh Tubes & Pipes Ltd. (Formly BMW)
34. Welspun Corp. Limited (Dahej)
35. Zenith Birla (India) Limited

ii) PIPE & TUBULARS TO A.P.I. STANDARDS

1. Arcelormittal Tubular Products Roman SA, Romania
2. BHEL (Trichy), India

3. Dalmine Spa (Enquiry to Tenaris), UAE
4. EEW korea Co. Ltd (Germany), Korea
5. EEW Korea Co. Ltd. (Korea), Korea
6. Eisenbau Kramer Gmbh, Germany
7. Hyundai Rb Co. Ltd. South Korea
8. Ilva Lamiere E Tubi Srl (Enq to Ilva Spa, Italy)
9. Inox Tech. SPA, Italy
10. Ismt Ltd. Ahmednagar, India
11. Ismt Ltd. Baramati, India
12. Jindal Pipes Ltd., India
13. Jindal Saw Ltd. (Kosi Works), India
14. Jindal Saw Ltd. (Nashik Works), India
15. Lalit Pipes and Pipes Ltd. India
16. Maharashtra Seamless Ltd., India
17. Man Industries (I) Ltd. (Pithampur), India
18. Mukat Tanks & Vessels Ltd., India
19. Pratibha Industries Limited, India
20. Ratnamani Metals and Tubes Ltd., India
21. Siderca S.A.I.C (Enquiry Totenaris), Uae
22. Sumitomo Metal Ind. Ltd., India
23. Surya Roshni Ltd., India
24. Swastik Pipes Ltd, India
25. Tata Steel UK Limited (Formerly C702)
26. Tubos De Acero De Mexico SA (Enq. Tenaris), UAE
27. Tubos Reunidos SA Spain
28. Umran Steel Pipe Inc (Turkey), Turkey
29. Valcovny Trub Chomutov, Czech Republic
30. Vallourec And Mannesmann Tubes, FRANCE
31. Welspun Corp Limited (Dahej), India

iii) <u>PIPE/TUBE CS (SEAMLESS) TO ASTM STDS</u>

1. Arcelormittal Tubular Products Roman SA, Romania
2. BHEL (Trichy), India
3. Changshu Seamless Steel Tube Co. Ltd., China
4. Dalmine SPA (Enquiry to Tenaris, UAE)
5. Heavy Metals & Tubes Limited (Mehsana), India
6. Ismt Ltd. Ahmednagar, India
7. Ismt Ltd. Baramati India
8. JFE Steel Corporation, Uae
9. Jindal Sdaw Ltd (Nashik Works) India
10. KLT Automotive and Tubular Products Ltd., India
11. Mahalaxmi Seamless Limited, India
12. Maharashtra Seamless Ltd, India
13. Products Tubulares S.A.U, Spain
14. Ratnadeep Metal Tubes Ltd., India
15. Staineest Tubes Pvt Ltd., India
16. Sumitomo Metal Ind. Ltd., India
17. Tubos Reunidos SA Spain
18. Valcovny Trub Chomutov, Czech Republic
19. Vallourec Andmannesmann Tubes France
20. Yangzhou Chengde Steel Pipe Co. Ltd Dubai (UAE)

iv) PIPE CARBON STEEL (WELDED) TO ASTM STDS

1. EEW Korea Co. Ltd. (Germany), Korea
2. EEW Korea Co. Ltd. (Korea), Korea
3. Eisenbau Kramer Gmbh, Germany
4. Hyundai RB Co. Ltd., South Korea
5. Inox Tech. SPA, Italy
6. Jindal Saw Ltd (Kosi Works), India
7. Lalit Pipes and Pipes Ltd., India
8. Man Industeries (I) Ltd. (Pithampur), India
9. Man Industries (India) Ltd. Anjar, India
10. Mukat Tanks & Vessels Ltd., India
11. Ratnamani Metals and Tubes Ltd., India
12. Sumitomo Metal India Ltd.,
13. Tata Steel UK Limited.

v) Flow Tee

1. M/s Coprosider SPA, Italy
2. M/s GEA Energy System India Limited, Chennai
3. M/s Multitex Filteration
4. M/s Pipeline Engineering, UK
5. M/s Scomark Engg. Limited (U.K.)
6. M/s Skeltonhall Limited, Engaland (U.K.)
7. M/s Technospecial SPA, Italy
8. M/s Tectubi SPA, Italy
9. M/s RMA Germany

vi) Split Tee

1. M/s Ipsco, Canada
2. M/s TD Willamsons, USA
3. M/s Veekay Vikram

vii) Flanges

1. M/s Aditya Forge Ltd., Vadodara
2. M/s Amforge Industries Ltd., Mumbai
3. M/s CD Engineering Co., Ghaziabad
4. M/s Echjay Forgings Pvt. Ltd. (Bombay), Mumbai
5. M/s Echjay Industries Ltd., Rajkot
6. M/s Forge & Forge Pvt. Ltd., Rajkot
7. M/s Golden Iron & Steel Works, New Delhi
8. M/s JK Forgings, New Delhi
9. M/s Metal Forgings Pvt. Ltd., Mumbai
10. M/s Perfect Marketings Pvt. Ltd., New Delhi
11. M/s Sky Forge, Faridabad
12. M/s S&G, Faridabad
13. Chaudhry Hammer Works Ltd., India
14. JAV Forgings (P) Ltd., India

15. Kunj Forgings Pvt Ltd., India
16. MS Fittings Mgf. Co. Pvt. Ltd.
17. R.N. Gupta & Co. Ltd, India
18. R.P. Engineering Pvt Ltd, India

19. Sanghvi Forgings & Engineering Ltd.
20. Shri Ganesh Forgings Ltd., India
21. Uma Shankar Khandelwal & Co., India
22. Sawan Engineers, Baroda
23. Stewarts & Lloyds of India Ltd., Kolkata
24. Engineering Services Enterprises
25. Abasi Engineering Works, India
26. Anandmayee Forgings Pvt. Ltd., India
27. CD Industries., India
28. Fivebros Forgings Vot Ltd., India
29. Good Luck Engineering Co., India
30. Korea Flange, South Korea
31. Lal Metal Forge Ltd, India
32. Melesi Officine
33. Amlrojie Melesi & C. SRL. Italy
34. Nicola Galperti & Figlio S.P.A India
35. Paramount Forge, India
36. Pradeep Metal Limited, India
37. Punjab Steel Works (the), India
38. R.D. Forge, India
39. Shah Industrial & Comml. Corporation, India
40. Ulma Forja S. Coop.
41. Vivial Forge Pvt. Ltd., Vadodara

viii) <u>Fittings</u>

1. M/s Commercial Supplying Agency, Mumbai
2. M/s Dee Development Engineers Ltd.
3. M/s Eby Industries, Mumbai
4. M/s Flash Forge Pvt. Ltd., Vishakhapatnam
5. M/s Gujarat Infra Pipes Pvt. Ltd., Vadodara
6. M/s M.S. Fittings Mfg. Co. Pvt. Ltd., Kolkata
7. M/s Stewarts & Lloyds of India Ltd., Kolkata
8. M/s Teekay Tubes Pvt. Ltd., Mumbai
9. M/s Pipe Fit, Baroda
10. M/s Sky Forge, Faridabad
11. M/s S&G, Faridabad
12. M/s Sawan Engineers, Baroda
13. Eby Fasteners, India
14. R.N. Gupta & Co. Ltd, India
15. Exten Engg. Pvt. Ltd.,
16. Sivananda Pipe & Fittings Ltd.
17. Chero Piping SPA, Italy
18. CSA Fittings, India
19. EBY Fasteners, India
20. Fittnox SRL, Italy
21. Keonsae High Pressure Co. Ltd., South Korea
22. Munro & Miller Fittings Ltd., U.K.

23. TK Corporation, South Korea
24. Tube Turn (India) Pvt. Ltd., India
25. Topaz Piping Industries, India
26. Technoforge SPA, Italy
27. P.K. Tubes & Fittings Pvt. Ltd., India
28. Vivial Forge Pvt. Ltd., Vadodara

ix) <u>Gaskets</u>

1. IGP Engineers (P) Ltd., Madras
2. Madras Industrial Products, Madras
3. Dikson & Company, Bombay
4. Banco Products (P) Ltd., Vadodara
5. Goodrich Gaskets Pvt. Ltd.,
6. Starflex Sealing India Pvt. Ltd., India
7. Teekay Meta Flex Pvt. Ltd.,
8. UNIKLINGER Ltd
9. HEM Engg. Corp.
10. Unique Industrial Packing Pvt. Ltd.

x) <u>Fasteners</u>

1. Nireka Engg. Co. (P) Ltd., Calcutta
2. Precision Taps & Dies, Bombay
3. AEP Company, Vithal Udyoug Nagar
4. Fix Fit Fasteners, Calcutta
5. Precision Engg. Industries, Baroda
6. Echjay Forgings Pvt. Ltd., Bombay
7. Capital Industries, Bombay
8. Boltmaster India Pvt. Ltd., India
9. Deepak Fasteners Limited, India
10. Fasteners & Allied Products Pvt. Ltd., India
11. Hardwin Fasteners Pvt. Ltd., India
12. J.J. Industries, India
13. Multi Fasteners Pvt. Ltd., India
14. Nexo Industries, India
15. Pacific Forging & Fasteners Pvt. Ltd., India
16. Pioneer Nuts & Bolts Pvt. Ltd., India
17. Precision Auto Engineers, India
18. President Engineering Works, India
19. Sandeep Engineering Works, India
20. Syndicate Engineering Industries, India
21. BEA SRL, Italy
22. Korea Parts & Fasteners (KPF), South Korea
23. Kundan Industries Ltd., India
24. Mega Engineering Pvt. Ltd., India
25. OME Metallurgica ERBESE S.R.L, Italy
26. Pankaj International, India
27. Udehra Fasters Ltd., India

xi) Fire Fighting Equipments

Fire Extinguishers

1. Avon Services (Production & Agencies) Pvt. Ltd., Bombay
2. Kooverji Devshi & Co., Bombay
3. Zenith Fire Services, Bombay
4. Safex Fire Services, Bombay
5. Reliable (Fire Protection) India Ltd., Bombay
6. Brij Basi Hi
7. tech Udyog
8. Bharat Engg Works, India
9. Gunnebo India Ltd
10. Nitin Fire Protection Industries Ltd, India
11. Supremex Equipments, India
12. Vimal Fire Controls Pvt. Ltd., India

(xii) Warning Tape

1. Sparco Multiplast Pvt. Ltd., Ahmedabad
2. M/s Raychem RPG Limited
3. M/s. Singhal Industries
4. M/s. POOJA packing, Mumbai
5. M/s. BINA Enterprises, Mumbai

(xiii) High Build epoxy coating

1. Berry Plastics – Powercrete
2. Specialty Polymer Canada
3. Denso Protal, Canada

(xiv) NDT AGENCY

1. NDT Services, Ahmedabad
2. GEECY Industrial Services Pvt. Ltd., Mumbai
3. Corrosion Control Services, Mumbai
4. Perfect Metal Testing & Inspection Agency, Calcutta
5. Inter Ocean Shipping Co., New Delhi
6. RTD, Mumbai
7. Sievert, Mumbai
8. X-Tech, Vizag
9. Riya NDT Engineers
10. TCR Engineering services Pvt.Ltd
11. Sitas Technical services
12. SITAS
13. Inspection agency

(xv) Transition fittings

1. George Fisher
2. Kimplas Piping Systems
3. M/s Friatech AG, Germany

4. M/s Aliaxis Utilities & Industry Pvt. Ltd (Formerly Glynwed pipe systems)
5. M/s Agru, Austria
6. M/s Jain Irrigation systems Ltd. Jalgaon

Notes:

1. For procuring the above listed bought out item(s) from the vendor/ supplier, whose name is not appearing in the above preferred make list, bidders can supply those item(s) from such vendors/suppliers who have earlier supplied same item(s) for the intended services and the offered item(s) is in their regular manufacturing/ supply range and the same may be accepted subject to following: -

a) The Vendor/ Supplier of bought out item(s) is a Manufacturer/ Supplier of the said item(s) for intended services and the same are in their regular manufacturing/ supply range.

b) The vendor/supplier should not be in the Holiday list of Client/ MECON/ Other PSU.

c) For items to be purchased with measurement unit either in length or in weight: - Should have supplied for intended services at least 15% of SOR quantity of same size, thickness, schedule, pressure & temperature ratings, SDR, etc. or higher (as applicable) as per technical details mentioned in SOR & Tender specification and in a single Purchase order (PO) and the same should have been supplied within last seven (07) year from the date of approval request made by the contractor.

d) For items to be purchased with measurement unit in number: -

Should have supplied for intended services at least 15% of SOR quantity of same size, thickness, schedule, pressure & temperature ratings, SDR, etc. or higher (as applicable) as per technical details mentioned in SOR & Tender specification in a single Purchase order (PO) and the same should have been supplied within last seven (07) year from the date of approval request made by the contractor.

2. For procuring any other item(s) {i.e., not listed above}, bidders can supply those item(s) from such vendors/suppliers who have earlier supplied same item(s) for the intended services and the offered item(s) is in their regular manufacturing/ supply range and the same may be accepted subject to following: -

a) The Vendor/ Supplier of bought out item(s) is a Manufacturer/ Supplier of said item(s) for intended services and the same are in their regular manufacturing/ supply range.

b) The vendor/supplier should not be in the Holiday list of Client/ MECON/ Other PSU.

c) For items to be purchased with measurement unit either in length or in weight: - Should have supplied for intended services at least 15% of SOR quantity of same size, thickness, schedule, pressure & temperature ratings, SDR, etc. or higher (as applicable) as per technical details mentioned in SOR & Tender specification in a single Purchase order (PO) and the same should have been supplied within last seven (07) year from the date of approval request made by the contractor.

d) For items to be purchased with measurement unit in number: -

Should have supplied for intended services at least One (01) number of same size, thickness, schedule, pressure & temperature ratings, SDR, etc. or higher (as applicable) as per technical details mentioned in SOR & Tender specification in a single Purchase order (PO) and the same should have been supplied within last seven (07) year from the date of approval request made by the contractor.

Remarks for Note 1 & 2:

i. To meet the criterion mentioned above, the successful bidder/ contractor is required to submit documentary evidences such as copy of FOA/ Purchase Order (PO)/ sub-purchase order and their supply record like Inspection certificates/report, Inspection release note, Tax paid invoice, performance certificates (if available), etc. from which it can be established that vendor have executed supplied the order. These documents shall require to be submitted by them within 30 days from date of Placement of Order for approval to CLIENT / MECON.

3. The details of vendors indicated in this list are based on the information available with MECON, Contractor shall verify the capabilities of each vendor for producing the required quantity and the items are in their regular manufacturing range. MECON does not take any guarantee / responsibility on the performance of the vendor. It is the contractor's responsibility to verify the correct status of vendor and their quality control before proposing to CLIENT / MECON for approval of vendor name. It is also the responsibility of contractor to expedite the material in time.

4. For those vendors whose names are not appearing in the above listed items but registered with MECON can also be considered for the supply of the items. Contractor has to propose such vendors name along with their valid registration letter issued by MECON.

APPENDIX-III

To Particular Job Specification of Work

LIST OF REGISTERED MANUFACTURER/SUPPLIER FOR BOUGHT OUT ITEMS (As per CVDC)

i) **PIPE CARBON STEEL TO INDIAN STANDARDS**

1. Jindal SAW Limited, New Delhi

ii) **PIPE / TUBE CS (SEAMLESS) TO ASTM STDS**

1. Jindal SAW Limited, New Delhi

iii) **PIPE CARBON STEEL (WELDED) TO ASTM STDS**

1. Jindal SAW Limited, New Delhi

iv) **Valve**

a) **GLOBE VALVES**

1. KSB Pumps Ltd., Pune
2. Venus Pumps & Engg.works, Howrah
3. Intervalve Poonawala Ltd., Kolkata
4. HAWA Engineering Ltd., Ahmedabad
5. Microfinish Valves Pvt.Ltd., Kolkata
6. Kalpana Valves manufacturing company private Limited., Howrah
7. HAWA valves india pvt.Ltd., Navi Mumbai
8. Fluidtech Equipment Pvt.Ltd., Howrah
9. Micon Valves india pvt.Ltd., Mahim
10. AMCO Industrial valves., Chennai
11. General Engineering consortium, Bangalore
12. Shakti Engineering Pvt.Ltd., Mumbai
13. KSB Pumps Limited., Kolkata
14. Chemico Valves Industries., Kolkata
15. Zoloto Industries., Jalandhar
16. Integral process control india private Limited., Pune
17. SAP Industries Ltd., Ahmedabad
18. Leader Valves Limited., Jalandhar
19. Ocean valve manufacturing company., Ahmedabad
20. Liberty valves Private Limited., Thane

b) **CHECK VALVES**

1. KSB Pumps Ltd., Pune
2. Venus Pumps & Engg.works, Howrah
3. Intervalve Poonawala Ltd., Kolkata
4. HAWA Engineering Ltd., Ahmedabad
5. Microfinish Valves Pvt.Ltd., Kolkata
6. Kalpana Valves manufacturing company private Limited., Howrah
7. HAWA valves India pvt.Ltd., Navi Mumbai
8. Fluidtech Equipment Pvt.Ltd., Howrah
9. Micon Valves india pvt.Ltd., Mahim
10. AMCO Industrial valves., Chennai
11. General Engineering consortium, Bangalore
12. Shakti Engineering Pvt.Ltd., Mumbai
13. KSB Pumps Limited., Kolkata
14. Chemico Valves Industries., Kolkata
15. Zoloto Industries., Jalandhar
16. Advance systems controls., Mumbai
17. Engineers., Hubli
18. Integral process control india private Limited., Pune
19. SAP Industries Ltd., Ahmedabad
20. Leader Valves Limited., Jalandhar
21. Ocean valve manufacturing company., Ahmedabad
22. Liberty valves Private Limited., Thane

c) **PLUG VALVES**

1. HAWA Engineering Ltd., Ahmedabad
2. Microfinish Valves Pvt.Ltd., Kolkata
3. Fluidtech Equipment Pvt.Ltd., Howrah
4. Micon Valves india pvt.Ltd., Mahim
5. Rasaii flow lines, chennai
6. Chemico Valves Industries., Kolkata
7. Integral process control india private Limited., Pune

d) **BALL VALVES**

1. KSB Pumps Ltd., Pune

2. Intervalve Poonawala Ltd., Kolkata
3. HAWA Engineering Ltd., Ahmedabad
4. Microfinish Valves Pvt.Ltd., Kolkata
5. HAWA valves India pvt.Ltd., Navi Mumbai
6. Fluidtech Equipment Pvt.Ltd., Howrah
7. Micon Valves India pvt.Ltd., Mahim
8. AMCO Industrial valves., Chennai
9. General Engineering consortium, Bangalore
10. Shakti Engineering Pvt. Ltd., Mumbai
11. KSB Pumps Limited., Kolkata
12. Chemico Valves Industries., Kolkata
13. Zoloto Industries., Jalandhar
14. Advance systems controls., Mumbai
15. Engineers., Hubli
16. Integral process control india private Limited., Pune
17. SAP Industries Ltd., Ahmedabad
18. Arya crafts & Engineering Pvt.Ltd., Palghar
19. Leader Valves Limited., Jalandhar

20. Liberty valves Private Limited., Thane
21. Chadan Enterprise., Mumbai
22. ARK Polychem P Limited, Noida

v) **FLANGE**

1. Shakti forge industries Pvt. Ltd., Rajkot

vi) **FITTINGS**

1. Shakti forge industries Pvt. Ltd., Rajkot
2. K.S. Pipe fittings Pvt. Ltd. Faridabad

vii) **FASTENERS**

1. Pioneer Nuts and Bolts Pvt Ltd., Ludhiana
2. Universal Precision screws., Rohtak

viii) **FIRE FIGHTING EQUIPMENTS**

Fire Extinguishers

i) Kanadia fyr fyter Pvt Ltd., Sihor
ii) Integrated fire Protection Pvt.Ltd., Kolkata

Notes:

1. For procuring the above listed bought out item(s) from the vendor/ supplier, whose name is not appearing in the above preferred make list, bidders can supply those

item(s) from such vendors/suppliers who have earlier supplied same item(s) for the intended services and the offered item(s) is in their regular manufacturing/ supply range and the same may be accepted subject to following: -

a) The Vendor/ Supplier of bought out item(s) is a Manufacturer/ Supplier of the said item(s) for intended services and the same are in their regular manufacturing/ supply range.

b) The vendor/supplier should not be in the Holiday list of Client/ MECON/ Other PSU.

c) For items to be purchased with measurement unit either in length or in weight: - Should have supplied for intended services at least 15% of SOR quantity of same size, thickness, schedule, pressure & temperature ratings, SDR, etc. or higher (as applicable) as per technical details mentioned in SOR & Tender specification and in a single Purchase order (PO) and the same should have been supplied within last seven (07) year from the date of approval request made by the contractor.

d) For items to be purchased with measurement unit in number: -

Should have supplied for intended services at least 15% of SOR quantity of same size, thickness, schedule, pressure & temperature ratings, SDR, etc. or higher (as applicable) as per technical details mentioned in SOR & Tender specification in a single Purchase order (PO) and the same should have been supplied within last seven (07) year from the date of approval request made by the contractor.

2. For procuring any other item(s) {i.e., not listed above}, bidders can supply those item(s) from such vendors/suppliers who have earlier supplied same item(s) for the intended services and the offered item(s) is in their regular manufacturing/ supply range and the same may be accepted subject to following: -

   a) The Vendor/ Supplier of bought out item(s) is a Manufacturer/ Supplier of said item(s) for intended services and the same are in their regular manufacturing/ supply range.

   b) The vendor/supplier should not be in the Holiday list of Client/ MECON/ Other PSU.

   c) For items to be purchased with measurement unit either in length or in weight: - Should have supplied for intended services at least 15% of SOR quantity of same size, thickness, schedule, pressure & temperature ratings, SDR, etc. or higher (as applicable) as per technical details mentioned in SOR & Tender specification in a single Purchase order (PO) and the same should have been supplied within last seven (07) year from the date of approval request made by the contractor.

   d) For items to be purchased with measurement unit in number: -

   Should have supplied for intended services at least One (01) number of same size, thickness, schedule, pressure & temperature ratings, SDR, etc. or higher (as applicable) as per technical details mentioned in SOR & Tender specification in a single Purchase order (PO) and the same should have been supplied within last seven (07) year from the date of approval request made by the contractor.

Remarks for Note 1 & 2:

i. To meet the criterion mentioned above, the successful bidder/ contractor is required to submit documentary evidences such as copy of FOA/ Purchase Order (PO)/ sub-purchase order and their supply record like Inspection certificates/report, Inspection release note, Tax paid invoice, performance certificates (if available), etc. from which it can be established that vendor have executed supplied the order. These documents shall require to be submitted by them within 30 days from date of Placement of Order for approval to CLIENT / MECON.

3. The details of vendors indicated in this list are based on the information available with MECON, Contractor shall verify the capabilities of each vendor for producing the required quantity and the items are in their regular manufacturing range. MECON does not take any guarantee / responsibility on the performance of the vendor. It is the contractor's responsibility to verify the correct status of vendor and their quality control before proposing to CLIENT / MECON for approval of vendor name. It is also the responsibility of contractor to expedite the material in time.

4. For those vendors whose names are not appearing in the above list but are subsequently registered with MECON can also be considered for the supply of the items. Contractor has to propose the names of such vendors along with their valid vendor registration letters issued by MECON.

5. Contractor has to also ensure that the vendors listed under Appendix-III have valid vendor registration certificate as on the date of placement of order on such vendors.

DRG.NO .: MEC/0007/05/28/M/TYP-001

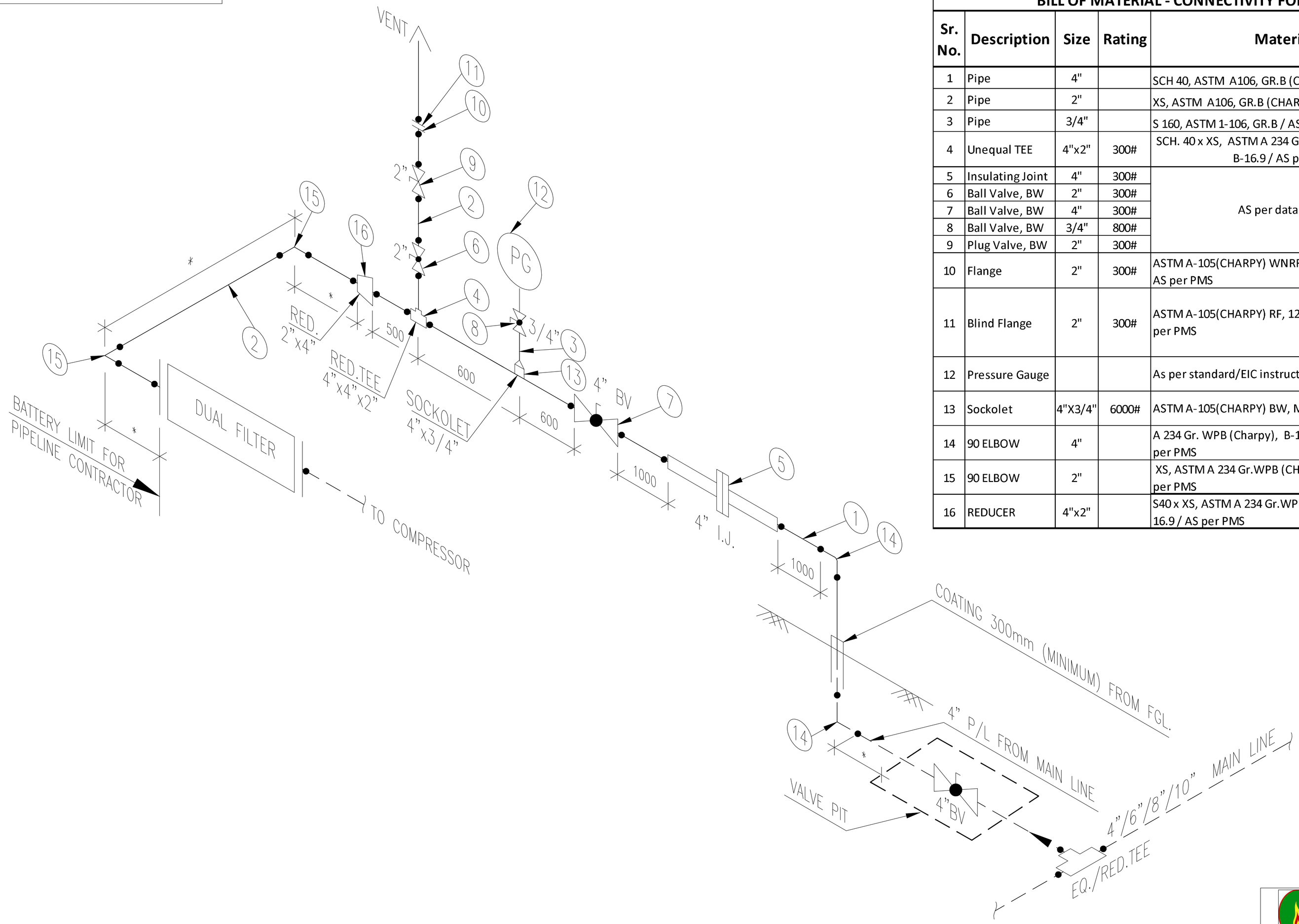

BILL OF MATERIAL - CONNECTIVITY FOR CNG STATION

Sr. No.	Description	Size	Rating	Material	Quantity	Remark
1	Pipe	4"		SCH 40, ASTM A106, GR.B (CHARPY) / AS per PMS	6 Mtrs	*
2	Pipe	2"		XS, ASTM A106, GR.B (CHARPY) / AS per PMS	18 Mtrs	*
3	Pipe	3/4"		S 160, ASTM 1-106, GR.B / AS per PMS	0.3 Mtrs	*
4	Unequal TEE	4"x2"	300#	SCH. 40 x XS, ASTM A 234 Gr.WPB (CHARPY) BW, B-16.9 / AS per PMS	1	
5	Insulating Joint	4"	300#	AS per data sheet	1	
6	Ball Valve, BW	2"	300#		1	
7	Ball Valve, BW	4"	300#		1	
8	Ball Valve, BW	3/4"	800#		1	
9	Plug Valve, BW	2"	300#		1	
10	Flange	2"	300#	ASTM A-105(CHARPY) WNRF, 125 AARH, B-16.5 / AS per PMS	3	
11	Blind Flange	2"	300#	ASTM A-105(CHARPY) RF, 125 AARH, B-16.5 / AS per PMS	1	REQUIREMENT FOR CONSTRUCTION PURPOSE ONLY
12	Pressure Gauge			As per standard/EIC instruction	1	
13	Sockolet	4"X3/4"	6000#	ASTM A-105(CHARPY) BW, MSSSP-97 / AS per PMS	1	
14	90 ELBOW	4"		A 234 Gr. WPB (Charpy), B-16.9, 1.5 D, BW / AS per PMS	2	
15	90 ELBOW	2"		XS, ASTM A 234 Gr.WPB (CHARPY) BW, B-16.9 / AS per PMS	4	
16	REDUCER	4"x2"		S40 x XS, ASTM A 234 Gr.WPB (CHARPY) BW, B-16.9 / AS per PMS	1	

FOR TENDER PURPOSE

TRIPURA NATURAL GAS COMPANY LTD.

मेकॉन लिमिटेड

MECON LIMITED

NOTES:
1. ALL DIMENSIONS ARE IN METER.
2. * TO BE FINALIZED AS PER SITE CONDITION.
3. ** UNDER PIPE SHALL BE ABOVE GROUND IN THE PREMISES OF CONSUMER. HENCE, DISTANCE SHALL BE SUIT AT SITE.
4. VENT HEIGHT SHALL BE MINIMUM 3.0 Mtr. / AS PER OWNER REQUIREMENT.

REV	DATE	ZONE	DESCRIPTION	BY	VERIFIED
			REVISION		

REV / SEC — CONCURRED BY

REFERENCES — DRG.NO.

SECTION	CGD
LOCATION	NEW DELHI
DESIGNED	SURAJ
DRAWN	SUNIL
CHECKED AND VERIFIED	GAJRAJ
APPROVED	SIG (RAJEEV SARSWAT)
	DATE 04.10.2024

CNG & CITY GAS DISTRIBUTION PROJECT AT TRIPURA

TYPICAL ISOMETRIC DETAIL FOR 4" ABOVE GROUND PIPING IN CNG STATION

SCALE : NTS | SHEET 1 OF 1 | REV 0

DRG.NO .: MEC/0007/05/28/M/TYP-001

DRG.NO .: MEC/0007/05/28/M/TYP-002

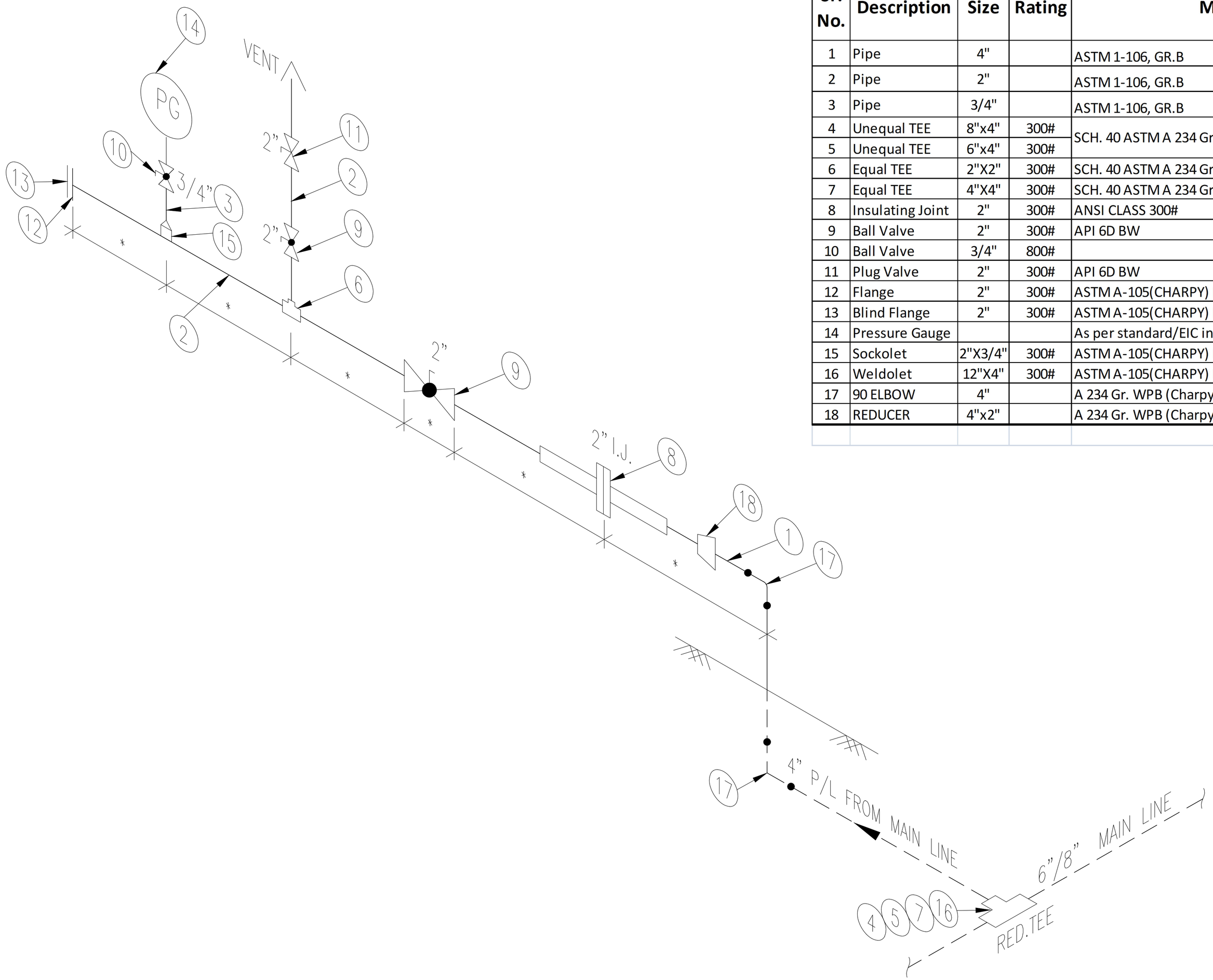

BILL OF MATERIAL - CONNECTIVITY FOR CNG STATION

Sr. No.	Description	Size	Rating	Material	Quantity	Remark
1	Pipe	4"		ASTM 1-106, GR.B	20 Mtrs	*
2	Pipe	2"		ASTM 1-106, GR.B	10Mtrs	*
3	Pipe	3/4"		ASTM 1-106, GR.B	1 Mtrs	*
4	Unequal TEE	8"x4"	300#	SCH. 40 ASTM A 234 Gr.WPB (CHARPY) BW, B-16.9	1	*
5	Unequal TEE	6"x4"	300#		1	*
6	Equal TEE	2"X2"	300#	SCH. 40 ASTM A 234 Gr.WPB (CHARPY) BW, B-16.9	1	
7	Equal TEE	4"X4"	300#	SCH. 40 ASTM A 234 Gr.WPB (CHARPY) BW, B-16.9	1	*
8	Insulating Joint	2"	300#	ANSI CLASS 300#	1	*
9	Ball Valve	2"	300#	API 6D BW	2	*
10	Ball Valve	3/4"	800#		1	
11	Plug Valve	2"	300#	API 6D BW	1	
12	Flange	2"	300#	ASTM A-105(CHARPY) RF, 125 AARH, B-16.5	1	
13	Blind Flange	2"	300#	ASTM A-105(CHARPY) RF, 125 AARH, B-16.5	1	
14	Pressure Gauge			As per standard/EIC instruction	1	
15	Sockolet	2"X3/4"	300#	ASTM A-105(CHARPY) BW, MSSSP-97	1	
16	Weldolet	12"X4"	300#	ASTM A-105(CHARPY) BW, MSSSP-97	1	
17	90 ELBOW	4"		A 234 Gr. WPB (Charpy), B-16.9, 3D, BW	4	
18	REDUCER	4"x2"		A 234 Gr. WPB (Charpy), B-16.9, 3D, BW	1	

FOR TENDER PURPOSE

NOTES:
1. ALL DIMENSIONS ARE IN M.
2. * FINALIZED AS PER SITE CONDITION.
3. LOCATION OF REDUCER (4"x2") WILL BE CHANGE AS PER AVAILABILITY OF S.No. 8, 9 & 10 AS PER BOM.

REV.NO	DATE	ZONE	DESCRIPTION	BY	VERIFIED
			REVISION		

REV / SEC — CONCURRED BY

REFERENCES — DRG.NO.

TRIPURA NATURAL GAS COMPANY LTD.

मेकॉन लिमिटेड
MECON LIMITED

SECTION	CGD
LOCATION	NEW DELHI
DESIGNED	SURAJ
DRAWN	SUNIL
CHECKED AND VERIFIED	GAJRAJ
APPROVED	SIG (RAJEEV SARSWAT)
	DATE 04.10.2024

CNG & CITY GAS DISTRIBUTION PROJECT AT TRIPURA

TYPICAL ISOMETRIC DETAIL FOR 4"/2" ABOVE GROUND PIPING IN CNG STATION

SCALE : NTS | SHEET 1 OF 1 | REV 0

DRG.NO .: MEC/0007/05/28/M/TYP-002